# DESIGN OF A DUAL AXIS PV TRACKING SYSTEM EMPLOYING UV SENSORS FOR HIGH PERFORMANCE

An Undergraduate CAPSTONE Project
By


1. MD. TAUHIDUR RAHMAN ID: 19-40850-2 Dept: EEE
2. MD. SIRAT AL MUSTAKIM AARAF ID: 19-41253-2 Dept: EEE
3. ABDULLAH AL MAMUN SHUVO ID: 19-41450-3 Dept: EEE
4. SAZZAD HOSSAIN SAHED ID: 17-34467-2 Dept: EEE

Under the Supervision of

**DR. MOHAMMAD ABDUL MANNAN**
Professor


**Fall Semester 2022-2023**
**January, 2023**


**Faculty of Engineering**
**American International University - Bangladesh**

# Design of a Dual Axis PV Tracking System Employing UV Sensors for High Performance

A CAPSTONE Project submitted to the Faculty of Engineering, American International University - Bangladesh (AIUB) in partial fulfillment of the requirements for the degree of Bachelor of Science in their mentioned respective programs.


1. MD. TAUHIDUR RAHMAN ID: 19-40850-2 Dept: EEE
2. MD. SIRAT AL MUSTAKIM AARAF ID: 19-41253-2 Dept: EEE
3. ABDULLAH AL MAMUN SHUVO ID: 19-41450-3 Dept: EEE
4. SAZZAD HOSSAIN SAHED ID: 17-34467-2 Dept: EEE


**Fall Semester 2022-2023,**
**January 2023**


**Faculty of Engineering**
**American International University - Bangladesh**

# DECLARATION

This is to certify that this project is our original work. No part of this work has been submitted elsewhere partially or fully for the award of any other degree or diploma. Any material reproduced in this project has been properly acknowledged.

AIUB reserves the right to reuse/update any proprietary material designed and developed for this work.

Students' names & Signatures

1. **MD. TAUHIDUR RAHMAN**

_ _ _ _ _ _ _ _ _ _ _ _ _ _ _ _ _ _ _ _

2. **MD. SIRAT AL MUSTAKIM AARAF**

_ _ _ _ _ _ _ _ _ _ _ _ _ _ _ _ _ _ _ _ _

3. **ABDULLAH AL MAMUN SHUVO**

_ _ _ _ _ _ _ _ _ _ _ _ _ _ _ _ _ _ _ _ _

4. **SAZZAD HOSSAIN SAHED**

_ _ _ _ _ _ _ _ _ _ _ _ _ _ _ _ _ _ _ _ _

# APPROVAL

The CAPSTONE Project titled **DESIGN OF A DUAL AXIS PV TRACKING SYSTEM EMPLOYING UV SENSORS FOR HIGH PERFORMANCE** has been submitted to the following respected members of the Board of Examiners of the Faculty of Engineering in partial fulfillment of the requirements for the degree of Bachelor of Science in the respective programs mentioned below on **January 2023** by the following students and has been accepted as satisfactory.

| | | |
|---|---|---|
| 1. MD. TAUHIDUR RAHMAN | ID: 19-40850-2 | Dept: EEE |
| 2. MD. SIRAT AL MUSTAKIM AARAF | ID: 19-41253-2 | Dept: EEE |
| 3. ABDULLAH AL MAMUN SHUVO | ID: 19-41450-3 | Dept: EEE |
| 4. SAZZAD HOSSAIN SAHED | ID: 17-34467-2 | Dept: EEE |

Supervisor
DR. MOHAMMAD ABDUL MANNAN
Professor
Faculty of Engineering
American International University-Bangladesh

External Supervisor
DR. MD. KAMRUL HASSAN
Associate Professor
Faculty of Engineering
American International University-Bangladesh

Prof. Dr. Md. Abdul Mannan
Director
Faculty of Engineering
American International University-Bangladesh

Prof. Dr. ABM Siddique Hossain
Dean
Faculty of Engineering
American International University-Bangladesh

ACKNOWLEDGEMENT

This book is about the design and development of a high-performance dual-axis PV tracking system using UV sensors. We are extremely grateful to everyone who helped us with our project.

First and foremost, we want to express our gratitude to Almighty Allah. This project would be impossible to complete without His willingness.

Then we would like to express our gratitude to our supervisor, Dr. Mohammad Abdul Mannan, Professor, Director, Faculty of Engineering, American International University - Bangladesh, for his invaluable assistance and guidance in achieving our goal.

We would like to thank Dr. Md. Kamrul Hassan, Associate Professor, Faculty of Engineering, American International University-Bangladesh, for providing valuable suggestion and guidance to complete this project.

We would like to express our heartfelt gratitude to Dr. Carmen Z. Lamagna, Vice Chancellor of American International University-Bangladesh, for providing us with an amazing study environment and the opportunity. We would also like to express our gratitude to Prof. ABM Siddique Hossain, Dean of the Faculty of Engineering at American International University-Bangladesh.

We owe a great deal to our family members for their unending support. We also want to thank our friends, whose assistance was invaluable. Finally, we would like to thank our faculty members, staff, lab assistants and our seniors for their assistance in completing our project.

1. MD. TAUHIDUR RAHMAN
2. MD. SIRAT AL MUSTAKIM AARAF
3. ABDULLAH AL MAMUN SHUVO
4. SAZZAD HOSSAIN SAHED

# TABLE OF CONTENTS

# LIST OF FIGURES

# LIST OF TABLES

# ABSTRACT

Globally, the use of photovoltaic (PV) systems for the generation of sustainable electricity has been rising quickly. However, the orientation of solar PV modules has a significant impact on the efficiency of PV systems. Previous research focused primarily on the development of sensor-based solar tracking systems using sun position sensors to improve the efficiency of PV systems. They used light-dependent resistors (LDRs) to detect the visible light spectrum in particular. LDRs, on the other hand, have significant limitations that can impair solar tracking performance. The use of ultraviolet (UV) spectrum captured by UV sensors has the potential to overcome LDR limitations. This is due to the cloud effect enhancing UV radiation during overcast conditions, as well as the capability of UV sensors. Given this, we recommend a novel UV sensor-based dual-axis solar tracking system that takes advantage of UV radiation enhancement and UV sensor capability to improve tracking movements and PV energy generation. The proposed solar tracking system's solar tracking performance is compared to that of a fixed flat-plate system and a conventional LDR-based solar tracking system in a comparative analysis. Under the tested conditions, it was discovered that the proposed solar tracking system performs effectively in terms of movement tracking. Finally, the results of the performance evaluation show that the proposed tracking system is profitable.

# Chapter 1

# INTRODUCTION

## 1.1. Overture

The world is witnessing energy crisis lately. The need for energy is increasing everyday but supply is decreasing gradually. So, it is high time to pay attention to the sustainable energy sources available around us and extract the maximum possible amount. We now live in a highly urbanized environment that uses a lot of energy to support a contemporary, consumerist way of life. This way of life, to which the majority of the modern world has grown accustomed, depends on damaging resources (fossil fuels) to provide energy for our houses and buildings. To live sustainably, we must adhere to the most effective and realistic means of preserving the natural world while promoting the economic and social advancement of mankind. Since we are the planet's stewards, it is our duty to address the issues that pose a threat to future life. The most common types of renewable energy sources are – Solar Energy from the Sun, Geothermal Energy from heat inside the Earth, Wind Energy, Biomass from plants and Wind Energy. The Sun will shine, plants will grow, wind will blow and rivers will flow – hence these sources are replenished naturally. Solar photovoltaic power may be efficiently harnessed in India, offering enormous scalability [1]. Additionally, solar energy offers the option of distributed power generation and permits quick capacity expansion with minimal lead periods. From the perspective of rural electrification and satisfying other energy needs for power, heating, and cooling in both rural and urban locations, off-grid decentralized and low-temperature applications will be desirable. Solar is the most secure source of energy from a security of supply standpoint because it is widely accessible. The complete amount of incident solar energy might theoretically be used to generate enough electricity to power the entire nation if it were to be captured efficiently. China, a rapidly developing country, is confronted with a number of energy generation issues, particularly the pressures of economic expansion and population growth. Over the next five years, China will continue to lead the world in the expansion of renewable energy capacity, despite the gradual elimination of renewable subsidies and the country's continued reliance on coal [2]. One of the nation’s most adversely impacted by climate change is Bangladesh. In Bangladesh, the renewable energy market has enormous potential. In Bangladesh, the share of renewable energy sources like solar has increased recently. As a result, Bangladesh has a sizable installed capacity of renewable energy. The shift to renewable energy sources will hasten economic growth even more, maintain inexpensive and dependable energy access, and enhance healthcare and quality of life. A side-by-side comparison of an LDR (Light Dependent Resistor)-based tracking system and a fixed flat-plate system was conducted. The advantages of Ultra Violet (UV) radiation enhancement and the UV sensor capabilities are utilized in our suggested system, which uses a novel UV sensor-based dual-axis solar tracking system. The performance of solar tracking might be negatively impacted by the major limits of LDRs (such as saturation of light intensity and ineffectiveness under low visibility situations). Utilizing the ultraviolet (UV) spectrum recorded by UV sensors shows promise for overcoming LDR constraints. As a result, the suggested innovative tracking method is both practical and profitable from an economic standpoint [3].

## 1.2. Engineering Problem Statement

Our chosen topic was to design a Dual Axis PV Tracking System employing UV sensors for high performance. The chosen topic meets the OBE Requirement and Complex Engineering Problem in the following ways –

- The proposed project requires in-depth knowledge about renewable energy technology, especially Solar PV Technology. It also needs extensive idea on the field of power electronics and comprehensive knowledge about microcontrollers and embedded systems.
- The proposed project has a conflicting technical issue regarding efficiency and cost. UV sensors are found to be better suited than LDRs under certain conditions, though it has its own demerits.
- The project proposes a Dual Axis PV Tracking System which was implemented using UV sensors. Commercially available axis trackers generally do not use UV sensors. So, our design requires abstract analytical thinking and originality in analysis.
- Solar power is a specialized form of energy which has very limited applications. In case of axis trackers, the UV sensor utilizes the UV spectrum in overcast conditions which is an infrequent occurrence.
- The project involves and benefits different groups of stakeholders. For obtaining the necessary components the power electronics and hardware market is involved. Academics and engineers related to the relevant fields are involved due to their expertise and research. Finally, the most important group of stakeholders are the end users who benefit from the efficient PV system. In

general, we can say that through the use of solar or green energy a small contribution can be made in the quest of sustainable development goals.

- The project has few fields of concern. The concept of solar energy is integrated with the use of microcontrollers. Manipulation of electrical parameters are done through electronic devices. So, there are various high-level problems consisting of many component parts.

## 1.3. Related Research Works

The research work has been categorized to two sections for simplicity. Papers, articles and journals published 5 years or less are discussed in the recent research section whereas the literature published for more than 5 years are reviewed in the earlier research section. The literature review has been completely focused on solar axis tracking systems which produced improved performance compared to the traditional static flat/tilted solar panel systems.

### 1.3.1. Earlier Research

In their article in 2014, Ilo, Onoh, and Eke proposed a tracking system based on artificial intelligence that employs a robotic arm with four degrees of freedom as mechanical support [4]. In order to track the location of the sun in the sky, Fathabadi proposed a sensor less dual axis solar tracking system driven by an MPPT controller in 2016 [5]. In the same year, research by Datta, Bhattacharya, and Roy examines the optimization of the tilt angle of a PV solar panel. According to research, maximizing the tilt angle alone can result in a power boost of about 10.94% [6]. A dual-axis solar tracking system with fuzzy logic-controlled microcontrollers was Kaysal's suggestion in 2016. PWM modulation was used in the design to control the actuator motors, which lowered power usage [7]. In their article in 2017, Mishra, Thakur, and Deep described a dual axis tracker made with an Arduino UNO microcontroller, Light Dependent Resistors (LDR), and an HC-05 Bluetooth Module that exhibits enhanced solar panel voltage output in comparison to the voltage achieved without tracking [8].

### 1.3.2. Recent Research

In 2019, Abadi, Imran, and Fasa developed a solar tracking system based on a Fuzzy PI controller in their article that was more efficient than a fixed system [9]. In the same year, Carballo and

Bonilla suggested a deep learning-based machine learning strategy utilizing Tensorflow [10]. For the purpose of transferring data from the solar panel to the IOT monitoring system, Said and Jumaat in 2020, designed a dual axis tracker in which the monitoring system was fitted with an ESP8266 WIFI module [11]. In their research in 2020, Rousan, Isa, and Desa suggests a single- and dual-axis tracking system based on an adaptive neural fuzzy inference system (ANFIS). By foreseeing the ideal tilt and orientation angles, ANFIS was utilized to successfully operate solar tracking systems [12]. In the same year, a fast-accurate approach for regulating the dual-axis sun tracker that combines. the MLP neural network and P&O algorithm was proposed by Khanjanianpak, Faraji and Rezaei. Their suggested approach shortens the tracking period and achieves more energy savings, enhanced effectiveness, and superior dynamic [13]. In 2021, a dual axis solar tracker using the Naive Bayes algorithm was proposed by Tharakan and Joshi. It is a particular kind of machine learning technique that has been utilized to forecast trustworthy direction [14]. During that year, an adaptive algorithm was utilized in Saymbetov and Mekhilef's dual axis solar tracker design to account for severe sun ray dispersion. When compared to the dual axis scheduled tracker, the performance of the tracker they built was 41% higher [15].

A single-axis solar tracking system prototype with a self-maintenance algorithm was developed by Veena KN and Nikhita Jalapure and presented in a research publication in 2021 [16]. In the same year, according to Ahmad, Razali and Misrun, a dual axis tracking system based on a microcontroller performs better than a static tilted panel. The system will be more affordable thanks to the usage of Arduino [17]. An efficient solar panel tracking mechanism developed by Pulungan and Son during that year makes use of a moving mass, a spring system, and an actuator. Compared to fixed panel systems, this solar tracker's ball screw design offers 21% better efficiency [18]. A UV sensor-based solar tracking system that makes use of the benefits of UV radiation augmentation and UV sensor capabilities to improve performance was proposed by Jamroen, Fongkerd, and Krongpha in 2021 [19]. In 2022, A dual axis solar tracker with a satellite compass and inclinometer was proposed by Wu, Wang, and Chang. By utilizing both an elevation- and an azimuth-oriented function, this tracking device enabled for the extraction of the maximum amount of power [20]. In the same year, with a horizontal single axis tracker, Wang and Shen introduced the Bifacial Companion Method to increase the efficiency of tilted bifacial solar modules [21].

## 1.4. Critical Engineering Specialist Knowledge

Certain critical specialized knowledges were recognized from the literature research in order to efficiently and effectively tackle the engineering challenge that was the project's foremost concern. Every study that was examined was based on sun tracking devices for PV panels. The usage of UV sensors and microcontrollers in this project is of the utmost importance. Review paper [19] provides an understanding of how UV sensors should be used in dual axis tracking. Despite not mentioning the use of UV sensors, papers [17] and [8] describe how to properly use an Arduino microcontroller. Paper [11] may provide information about how to link Arduino with the Internet of Things (IoT). The publications [12] and [13] are of paramount concern for the project's future development if artificial intelligence is to be integrated into the suggested architecture since they implement artificial intelligence, more especially neural networks.

## 1.5. Stakeholders

Different stakeholders and their requirements with the project can be identified from the research works and publications directly or indirectly. The central government is a stakeholder in this project. Due to the relevance of energy and energy industries, both fossil fuel and renewable, government policy formulation has immense significance. If dual axis solar trackers are implemented commercially and PV on grid systems are implemented [20], central government and energy ministry becomes crucial stakeholders. Another stakeholder is the local government. Necessary human resources, training and logistical support is provided by the local government. Economy of an area might depend on the energy obtained from the PV system. An important stakeholder is the manufacturer of different components related to the PV axis tracking system. This can range from the PV panel manufacturers to local electrical and electronic retail sellers. In paper [18], the specifications of the stepper motor and stepper motor driver can be used as an example, of which there are many in the other literature reviewed. As this design is a solution of a complex engineering problem, the specifications must be met with absolute accuracy and in this field, the manufacturers play a vital role. Financial investors are a major stakeholder in the renewable energy world. Technologies of renewable energy, in this case, solar axis tracking system requires a lot of financial backing in its research and development phase, an also huge investment in manufacturing phase. Due to these reasons, evaluation of economic performance is required. Some of the many indicators are Levelized Cost of Energy (LCOE), Net Present Value (NPV), Discounted Payback Period (DPBP) and Profitability Index (PI) [19]. Cost analysis is a major part of any research which is shown in papers [5] and [21]. The power/energy consumers or simply the common people are the prime stakeholders regarding this project. A technology which can improve the performance of solar panels by extracting more power from the sun will only benefit the consumers. The scientific community is also a stakeholder due to the nature of the technology and its future prospects. Finally, the overall environment including the flora and fauna are also stakeholders with regards to the environmental sustainability.

## 1.6. Objectives of This Work

The main objective of this project was to create a Dual Axis Solar Tracker employing UV Sensors so that maximum energy from the Sun can be captured and converted to useful energy. The prime reason to use UV Sensors instead of LDRs was to overrule the constraints of LDRs – saturation of light intensity and ineffectiveness under low-visibility conditions – which can unfavorably affect the solar tracking performance.

### 1.6.1. Primary Objectives

- To extract maximum solar energy from the Sun
- To ensure stable fuel sources for power generation
- To increase energy security while decreasing the demand for fuel sources
- To create zero carbon emission

### 1.6.2. Secondary Objectives

- To shift consumption of non-renewable energy resources to renewable sources
- To reduce contamination of air and water by burning fewer fossil fuels

## 1.7. Organization of Book Chapters

**Chapter-2: Project Management –** This chapter does different analysis like the S.W.O.T., P.E.S.T and Cost analysis of the project.

**Chapter-3: Methodology and Modeling –** This chapter contains the block diagram and hardware model of the project.

**Chapter-4: Project Implementation –** This chapter consists of the information of the required tools and components for the project.

**Chapter-5: Results Analysis & Critical Design Review –** The outputs of the project and the comparison to the conventional method is done in this chapter.

**Chapter-6: Conclusion –** The novelty, limitations and future scopes are discussed in this chapter.

# Chapter 2

# PROJECT MANAGEMENT

## 2.1. Introduction

After the COVID-19 epidemic, many parts of the world saw shortages and rising prices in the markets for oil, gas, and power, which marked the beginning of the global energy crisis. Higher energy costs made it difficult for people to make ends meet, prompted some factories to reduce output or shut down altogether, and hampered economic growth. In the transition to clean energy, solar power is the key future production technology, and as prices decline due to economies of scale, its significance will only grow. The fact that it is a clean, renewable source of electricity is its greatest benefit. After analyzing the current worldly crisis and needs, we have decided to create a Dual Axis Solar Tracker which can absorb maximum energy from the Sun during the day, and hence the pressure on the non-renewable energy sources can be reduced to some extent. The advantages of UV radiation enhancement and UV sensor capabilities will be used to increase tracking motions and PV energy generation in the unique UV sensor-based dual-axis solar tracking system. When the solar tracking system is installed on a pseudo-azimuthal mounting structure that can track the sun's movement via daily and elevation angles, four intensity signals of UV radiation received by UV sensors are compared and used as inputs. The three factors of planning, technology, and people are ultimately what determine whether engineering leaders are great or just good. The engineering management principles were appropriately followed throughout the project work because all the decisions, operational works and the methods were done as a team and keeping all the risk factors in consideration.

## 2.2. S.W.O.T. Analysis

S.W.O.T. stands for Strengths, Weaknesses, Opportunities, and Threats. It instructs us on how to improve upon our strengths, address our weaknesses, seize opportunities, and reduce risks. SWOT analysis will be used to evaluate our project before we choose any new tactics.

**Strengths –**

- Can provide more electricity than a solar panel that isn't moving.
- Greater flexibility enables a better energy output on bright days.
- Greater extent of directionality accuracy.
- Increased production of energy.
- Affordable.

**Weaknesses –**

- Component failure is more frequent when there are more moving parts.
- Reduced durability and dependability.
- Poor performance in cloudy or overcast conditions.
- They are thought of as sophisticated systems with moving parts, which makes them slightly more expensive than their stationary counterparts.
- Requires more upkeeping than permanent systems.
- Requires extensive site preparation.

**Opportunities –**

- There are many possible applications, because it is currently a hot area for research and development.
- Project can be implemented on a large scale.
- More research for higher accuracy.

**Threats –**

- The entire device will suffer if any component is malfunctioning.

Every project poses a danger to the local community and the environment. Despite a few issues, this project has many advantages and cost-effective future prospects.

## 2.3. Schedule Management

The schedule management of this works is given as a Gantt chart as shown in Figure 2.1.

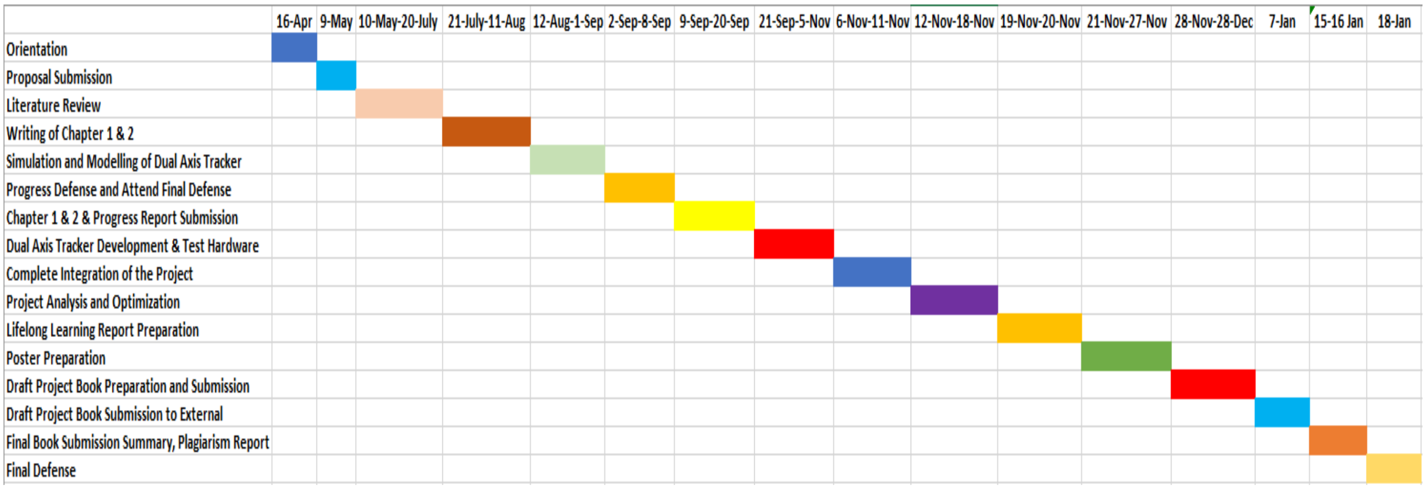


**Figure 2.1:** Gantt chart of the project work

## 2.4. Cost Analysis

A project's costs should be as low as possible. We made every effort to keep the cost of this project as low as we could. The list below includes both the preliminary and actual costs. The total standard deviation as well as the standard deviation for both the estimated and actual pricing have been calculated.

**Table 2.1:** Price list of the components

| Component | Quantity | Projected Cost (in BDT) | Actual Cost (in BDT) |
|---|---|---|---|
| Actuator (300 mm) | 2 | 12000 | 7600 |
| Arduino Mega | 1 | 2200 | 1200 |
| UV Sensor | 4 | 1640 | 1200 |
| Solar Panel | 1 | 1600 | 1400 |
| Buck Converter | 1 | 100 | 70 |
| Adapter | 1 | 400 | 300 |
| Veroboard | 1 | 100 | 90 |
| L298 Motor Drive | 1 | 140 | 100 |
| ESP8266 Microcontroller | 1 | 350 | 200 |
| ADXL345 Accelerometer | 1 | 300 | 150 |
| Voltage Sensor 0-25V | 1 | 120 | 80 |
| S712 Socket | 1 | 150 | 100 |
| Miscellaneous | | 1000 | 800 |
| **Total Price (in BDT)** | | **20100** | **13290** |
| **Standard Deviation** | | **3220** | **2038** |

The standard deviation of the actual cost is 2038. In statistics, the standard deviation is a measure of variance or dispersion (which refers to the degree to which a distribution is stretched or compressed) between values in a collection of data. The tendency is for the data points to be nearer the mean (or expected value), the lower the standard deviation. A bigger standard deviation, on the other hand, denotes a wider range of values. The components price range is from extremely high to extremely low, so the standard deviation value is expected.

## 2.5. P.E.S.T. Analysis

P.E.S.T. is a method for strategically analyzing external business variables. Political, Economic, Social, and Technological (PEST) elements are referred to by this abbreviation. To ascertain whether outside influences might have an effect on the company, PEST analysis is necessary. These elements need to be looked at and acknowledged before the project is made available on the market.

**Political –**

Reduce your electricity costs. With net metering, extra electricity might be sold to utility company to get even less energy costs! As a result, citizens would trust the government more and elect them once again.

**Economical –**

The amount spent on power bills each month can be greatly reduced by investing in solar energy. This energy source depends on ultraviolet (UV) rays, and the clean energy produced can reduce the price of domestic power use. Solar panels may have a one-time out-of-pocket cost, but they are an investment that pays off right away. This notion is applicable to people who balance their monthly utility costs, avoid using non-traditional energy sources for activities like lighting and cooking, and avoid spending money on pricey utility grid connections if utility power is not easily accessible.

**Social –**

The use of solar energy can offer an often more dependable and affordable power supply, giving the residents of these towns greater possibilities to advance and better their lives. Costs of gasoline, energy, and alternative resources are constantly rising, which is a major problem for many emerging and underdeveloped nations.

**Technological –**

If we use technology appropriately, it can be a helpful servant. Technology may improve our lives with the aid of creative ideas. This project utilized several devices like the Arduino MEGA, Accelerometer, Actuator, Motor Drive Module and ESP8266 Microcontroller which is an implementation of modern technology. In the upcoming critical times, energy saving technologies would be highly vital and important for the world. So, it is high time to research and develop the technical benefits of renewable energy, and a step to it is the Solar Tracker.

## 2.6. Professional Responsibilities

Engineers have various responsibilities regarding renewable energies. The professional responsibility of an engineer is to conceive new tools and machinery that can produce energy without harming the environment. Renewable energy engineers can aid in containing the present climate catastrophe by enhancing and implementing currently available renewable energy sources, such as solar energy arrays. These engineers are frequently hard at work creating new sustainable energy generation techniques that might possibly be more efficient at producing power.

### 2.6.1. Norms of Engineering Practice

While working on this project, decisions were made as a team and with due diligence. Several attempts have been made in order to achieve the desired result with reliability and consistency. Reasonable judgement was also done in order to accomplish the project tasks. As a result, good engineering practice was followed in this project.

### 2.6.2. Individual Responsibilities and Function as Effective Team Member

**SAZZAD HOSSAIN SAHED (17-34467-2)**

- Communication
- Quick feedback ability
- Maintaining healthy team environment

**MD TAUHIDUR RAHMAN (19-40850-2)**

- Making sure every task has been completed in due time
- Simulation
- Book Writing
- Time Management
- Responsibility
- Conflict Resolution in the Team
- Positive reinforcement

**MD SIRAT AL MUSTAKIM AARAF (19-41253-2)**

- Leading the team throughout the project period
- Taking constructive criticism
- Confidence
- Analytical Skills
- Clarity

**ABDULLAH AL MAMUN SHUVO (19-41450-3)**

- Active listening
- Teamwork
- Confidence

## 2.7. Management Principles and Economic Models

While planning the project, a competent team was formed with applicable members. Then the work was divided in an equivalent pattern so that each member has a balanced number of tasks to accomplish. Efficient work was done under the authority of each member with responsibility. It was also made sure that the leadership role was fulfilled by only one member, so that the goals are unified.

After the COVID-19 pandemic, the prices of the hardware had increased significantly. As a result, the initial budget plan of the project had collapsed. Therefore, a deeper analysis was done in the market to find the alternatives of expensive parts. So, it was more time consuming and hectic for the members. But later on, the project became cost effective.

## 2.8. Summary

The project's major goal was to create a Dual Axis Solar Tracker using UV Sensors rather than LDRs because UV Sensors can track more sunlight and provide more power. Even a minor percentage increase in power generation during an energy crisis can produce significant savings. As a result, it might be a world-changing adaptation. The Gantt Chart served as the basis for the project's execution. Everything was done in a methodical manner. Any discrepancies were immediately reported to our supervisor, who then led us to the appropriate remedy. The novel UV sensor-based dual-axis solar tracking system will maximize tracking motions and PV energy generation by utilizing the benefits of UV radiation intensification and UV sensor capabilities. Four UV intensity signals acquired by UV sensors are compared and utilized as inputs when the solar tracking system is mounted on a pseudo-azimuthal mounting framework that can follow the sun's movement via daily and elevation angles. Engineering executives' effectiveness is ultimately determined by the three components of planning, technology, and people. The project work was conducted in accordance with the engineering management principles because all choices, operational tasks, and techniques were carried out collaboratively while taking all risk factors into account. As a result, the project could be successfully finished.

## Chapter 3

# METHODOLOGY AND MODELING

## 3.1. Introduction

Demand for reliable, clean electricity that originates from renewable energy sources has risen in recent decades. One such example is the use of solar electricity. It is still difficult to maximize the amount of sunlight that is captured and used to produce electricity [23]. In this study, a solar panel mount outfitted with a dual-axis solar tracking controller is built and deployed. By pointing the solar panels toward the sun and following the path of the sun through the sky, the maximum amount of energy may be captured by ensuring that the sun's rays strike the solar panels perpendicularly. As a result, efficiency and electricity increased. The usage of photovoltaic (PV) systems for producing green energy has been rapidly expanding throughout the world. However, the efficiency of PV systems is significantly impacted by the orientation of solar PV modules. The main goal of prior studies aiming at increasing the efficiency of PV systems was the creation of sensor-based solar tracking systems using sun position sensors [25]. LDRs, which can detect the visible light spectrum, were specifically used. However, LDRs have significant limitations that might impair solar tracking ability (such as saturation of light intensity and inefficiency in low visibility settings). Utilizing UV sensors' ultraviolet (UV) spectrum data demonstrates how to circumvent LDR limitations. Dual-axis solar tracking systems are considered to be the most efficient clean energy collectors since they are mobile on both the horizontal and vertical axes. Compared to their static counterparts, these devices are able to capture the greatest solar energy. One of the distinguishing features of a dependable and robust solar tracking system is the energy output of the PV panel. Fixed-tilted PV panels, solar concentrators, and solar trackers, to mention a few examples of energy-harvesting equipment, are all directly tied to energy management and energy production [26]. Renewable energy-based solutions are growing in popularity. Photovoltaic (solar) systems are one example. To increase efficiency, a solar system's power output should be increased. Keeping solar panels oriented toward the sun will boost their ability to generate electricity [27]. Consequently, a system for tracking the sun is required. This is undoubtedly a cheaper option than installing more solar panels. It has been determined that a tracking system can increase solar panel yield by 30 to 60% compared to a stationary array. A sustainable resource is the rapidly developing energy source that may eventually displace conventional energy. This is classified as a clean energy source that can be continuously supplied and which cannot run out of energy. The most frequently questioned concept is the sustainability of sustainable resources [24]. There must be enough energy available to meet the demands. Understanding how long energy can be used for is crucial since some natural resources, like wind, geothermal, solar, and tidal energy, may self-regenerate [22].

## 3.2. Block Diagram and Working Principle

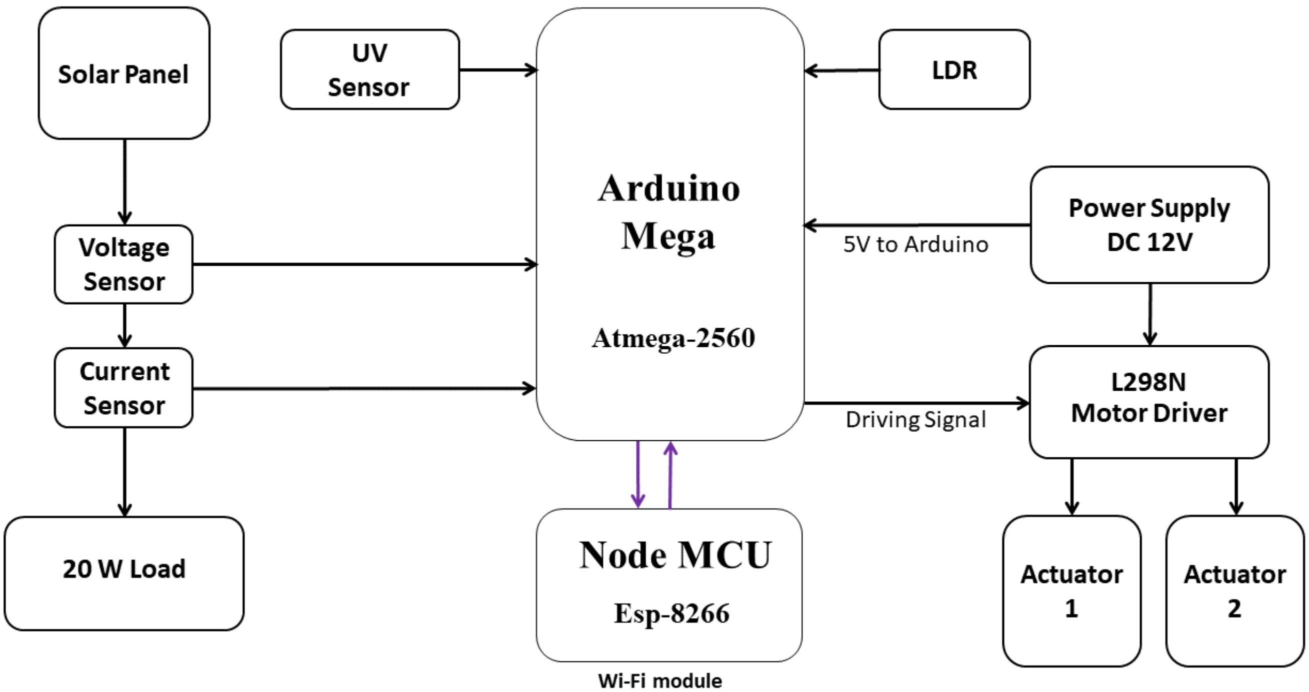


**Figure 3.1:** Block diagram of proposed system

The chosen topic was to design a Dual Axis PV Tracking System employing UV sensors for high performance. The selected topic meets the OBE Requirements and solves Complex Engineering Problems. A thorough understanding of renewable energy technology, particularly solar photovoltaic technology, is necessary for the proposed project. It also requires in-depth understanding of the field of power electronics as well as thorough familiarity with microcontrollers and embedded systems. A dual axis PV tracking system is built using UV sensors in the proposed system. Axis trackers that are advertised for sale frequently lack UV sensors. As a result, our design requires imaginative analysis and abstract thought. A dual axis PV tracking system is built using UV sensors in the proposed system. Axis trackers that are advertised for sale frequently lack UV sensors. Therefore, creative analysis and abstract analytical thinking are necessary for our design to function. There are not many issues with the project. Microcontrollers are used in conjunction with the idea of solar energy. Electronic gadgets are used to manipulate electrical characteristics. Therefore, there are many high-level problems with several subproblems.

The Arduino is used in this dual axis solar tracking system model. If both axes are covered by this setup and the ultra-violet radiance of the sun is used for sensory purposes, it will ensure a reduction in many complications of a standard PV panel while also adding extra power production. The majority of the coding in this setup is done with Arduino code, which controls the overall function of the panel. The voltage and current sensors detect the data from the PV panel and then send it to the Arduino MEGA. The motor driver, which is linked to the microcontroller, controls the direction and speed of the motor. In a nutshell, it regulates the accelerometer. Thus, the performance of the entire system is improved.

## 3.3. Modeling

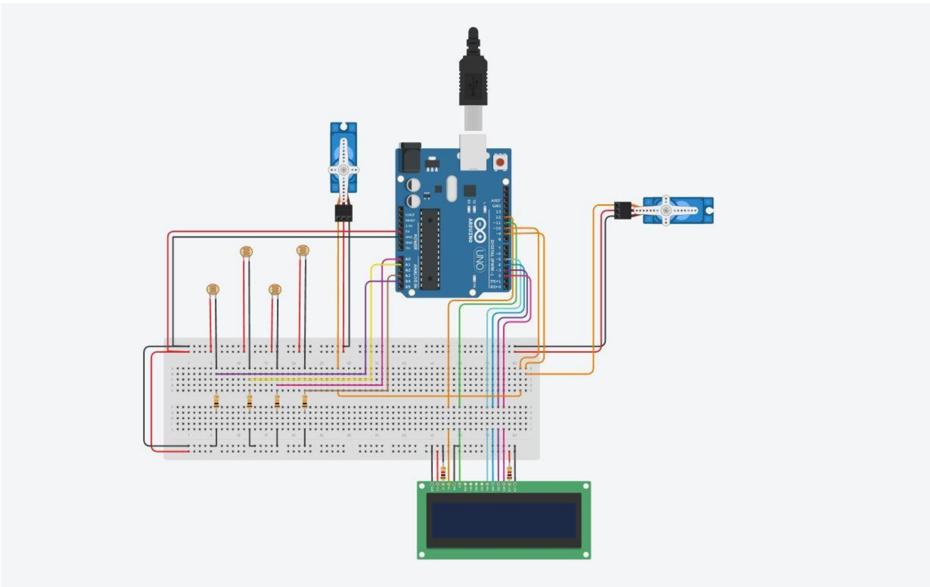

**Figure 3.2:** Simulation model of servo motors from variable solar radiation (using TinkerCAD)

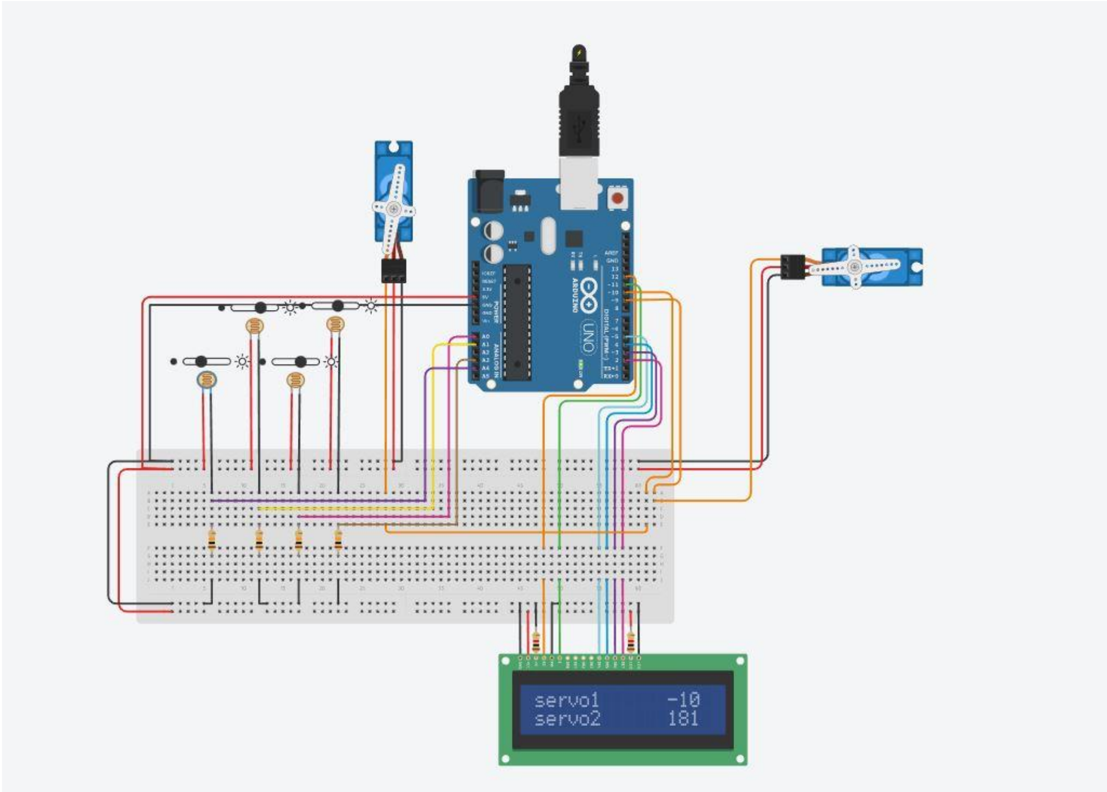


**Figure 3.3:** Rotation of servo motors from variable solar radiation (using TinkerCAD)

**Software Model:**

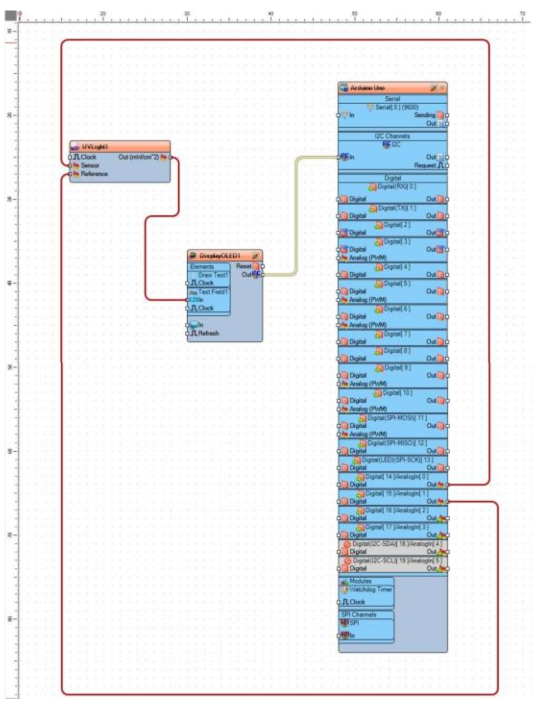

**Figure 3.4:** Connection diagram of UV sensor (using Visuino)

The proposed project necessitates extensive knowledge of renewable energy technology, particularly solar PV technology. It also necessitates extensive knowledge of power electronics as well as microcontrollers and embedded systems. UV sensors are used in the proposed system to build a dual axis PV tracking system. UV sensors are typically missing from commercially available axis trackers. As a result, our design requires creative analysis and abstract thinking. UV sensors are used in the proposed system to build a dual axis PV tracking system. UV sensors are typically absent from axis trackers that are marketed for sale. As a result, abstract analytical thinking and innovative analysis are required for our design to work. The project is concerned with only a few issues. The use of microcontrollers is combined with the concept of solar energy. Electronic devices are used to manipulate electrical parameters. So, there are various high-level problems consisting of many component parts.

## 3.4. Summary

The solar radiation from the sun that is directed toward the PV panel to which the UV sensors are attached. The data is collected through voltage and current sensors and sent to the Arduino Mega, which then sends it to the cloud platform via the ESP8266 Microcontroller. The cloud platform is used for remote monitoring as well as database creation. The microcontroller performs data smoothing and tracking, which is then sent to the motor drive module. Over here, two actuators control the horizontal and vertical movement of the panel. Thus, based on this flow chart-based block diagram, this is how the entire implemented model works. The photovoltaic panel is installed on a specially designed stand. The accelerometers are then attached to the panel, which controls its tilt. On top, four UV sensors detect UV rays emitted by the sun. The panel's output is connected to the voltage and current sensors, which are connected to the Arduino Mega via wires. The current sensor is also connected to a load. A motor driver is attached to the microcontroller's digital pin and connected to the actuators. Furthermore, after the data is processed in Arduino, it is sent to the database via the ESP8266 Microcontroller.

# Chapter 4

# PROJECT IMPLEMENTATION

## 4.1. Introduction

This project is solely based on the idea of using a solar PV panel in accordance with UV sensors to get the maximum possible output from the setup. The solar tracker works both in vertical and horizontal directions as dual axis implementation is done over here. The aim of designing such a system is due to different factors that is taken into consideration when placing a solar PV panel for power generation. Photovoltaic systems are considered as one of the solar power generation system procedures. One of the main issues for the construction of a photovoltaic power plant is to determine the type of solar panel installation structure to produce maximum energy of the photovoltaic system to fulfil the demand of today's world. Most photovoltaic panels used around the world are at a fixed angle which doesn't cover the necessary functions required [28]. The total energy produced yearly by PV systems with dual axis solar trackers were more than the energy produced by single axis panels. To increase power generation, we used solar trackers that guided the panels in the direction of the sun in both the axes. Energy crisis is one of the prime issues in a developing country like Bangladesh. The gap between generation and demand is huge due to lack of proper management. Renewable energy is the only answer to solve this issue where solar energy is one of the most effective resources of the renewable energy which could play a significant role to solve this crisis. This research presents a performance analysis of dual axis solar tracking system using Arduino [29]**.** If both the axes are covered through this setup and if the ultra-violet radiance of the sun is used for sensory purposes, then it will assure reduction of many complications of a general PV panel and add an extra production of power as well. Mainly the coding portion of this setup is done through Arduino coding which therefore controls the overall function of the panel. The voltage and current sensor sense the data which is found from the PV panel and therefore proceeds to provide the data to the Arduino MEGA. The motor driver which is connected to the microcontroller basically controls the direction and speed. In short, it controls the accelerometer. In this manner, it introduces us to the overall performance improvement of the entire system.

## 4.2. Required Tools and Components

In order to finalize the entire setup of this dual axis UV sensor-based system, the required and used components are listed below with the fair share of details:

- **Actuator (300 mm) – 2 pieces**

An actuator is a part of a device that assists it to achieve physical movements. Simply put, it is the component in any machine that enables movement. It basically converts energy into motion which is beneficial for the PV panel as the accurate movement of this panel assures greater performance. It controls solar panels to tilt on dual axis in this setup and it changes positions accordingly to direct sunlight for proper functioning.

- **Arduino Mega – 1 piece**

It is a microcontroller which is optimized to perform a dedicated low-power application - ideal for embedded systems. The microcontroller is used in this case for receiving the date found from the voltage and current detecting sensors and proceeding it to the online database and also the motor driver is connected to the microcontroller which controls the direction and speed.

- **UV Sensor – 4 pieces**

The main sensor used in this case is the UV sensor that detects the ultra violet rays of the sun proceeds to help function the PV panel accordingly. This form of electromagnetic radiation has shorter wavelengths than visible radiation and used for determining exposure to ultraviolet radiation in this experiment.

- **Solar Panel – 1 piece**

The solar panel used converts sunlight into electrical energy. This energy is used to generate electricity or for storage purposes. By using the UV sensor, the panel reacts accordingly and proceeds towards functionality.

- **Buck Converter – 1 piece**

This is a DC-DC converter that converts the high output voltage to a lower one so that the components used don't get damaged and it can work properly. Moreover, Efficient power conversion extends battery life and also reduces heat all in one package.

- **Adapter – 1 piece**

Adapter is used for connecting a peripheral device with one plug to a different jack on the laptop for proper seamless connectivity.

- **Veroboard – 1 piece**

The circuit setup is done in a Veroboard. This Veroboard is used for initial electronic circuit development and construct and complete electronic units in small quantity.

- **L298 Motor Driver – 1 piece**

It is an interface between the motors and the control circuits. It needs high amount of current whereas the controller circuit works on low current signals. The motor driver is connected to the digital pin of the microcontroller which basically controls the speed and direction of accelerometer.

- **ESP8266 Microcontroller – 1 piece**

This microcontroller is used to send the data which is found from the voltage and current sensors by using the Wi-Fi to the online database or application which can be used later for references.

- **ADXL345 Accelerometer – 1 piece**

This is used to alter obtained physical acceleration from motion into a voltage output. Based on the code provided it controls the tilt angle of the PV panel and after reaching threshold it stops the panel from moving further.

- **Voltage Sensor 0-25 V – 1 piece**

This sensor is used to sense the voltage which is found from the PV panel and later provides the data to the Arduino Microcontroller.

- **S712 Socket – 1 piece**

This socket is used to allow communication between two different functions on the exact or opposite kind of machines.

## 4.3. Implemented Models

The proposed model for this project is shown through a block diagram that consists all the necessary components and flow of work linking all the components together. The block diagram shows the first step to be the solar radiation from the sun which goes to the PV panel where the UV sensors are attached. From there the data is collected through voltage and current sensors and it goes to the Arduino Mega which later goes to the cloud platform through ESP8266 Microcontroller. The cloud platform is used for remote monitoring and creating database. From the microcontroller data smoothing and tracking strategy takes place which goes to motor drive module. Two actuators are present over here which control the horizontal and vertical direction of the panel. Thus, this is how the entire implemented model works based on this flow chart-based block diagram.

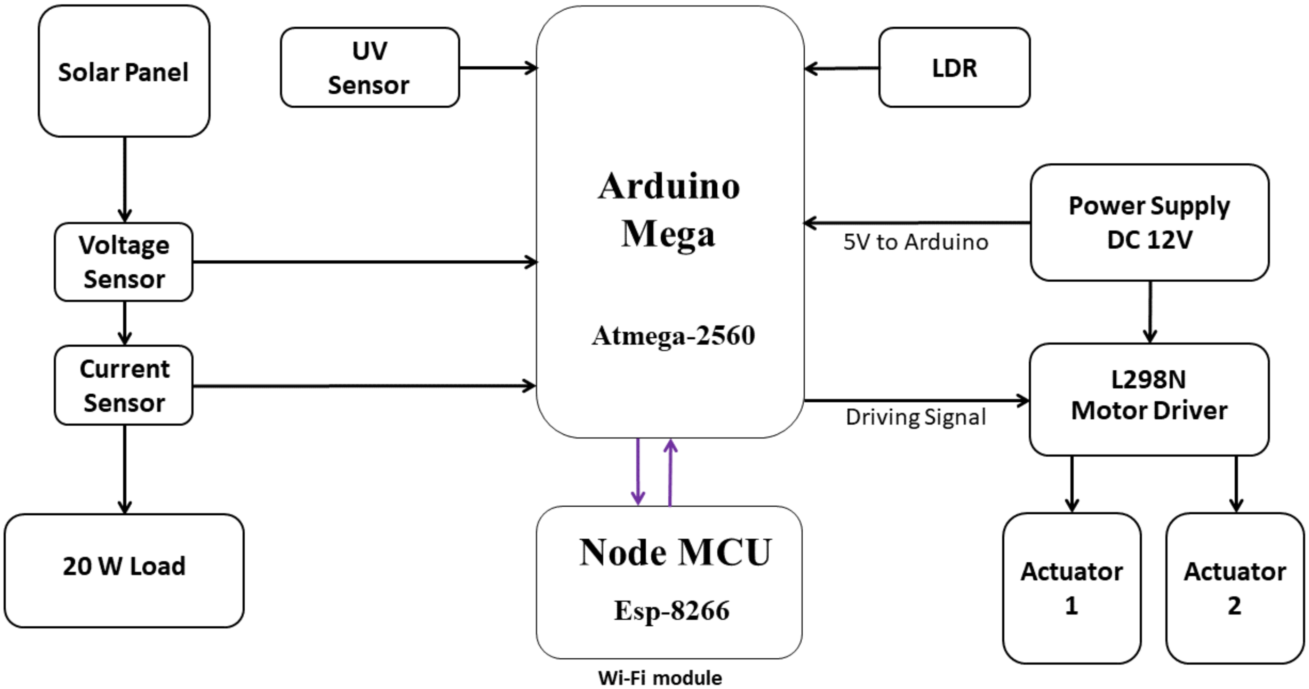


**Figure 4.1:** Block Diagram of Proposed System

### 4.3.1. Simulation Model

The simulation portion of this project is primarily completed with Tinker CAD and Visuino simulation software, with the entire setup divided into two sections. Tinker CAD is a free and simple 3D design, electronics, and coding app. The first section is done in Tinker CAD and shows the rotation of servo motors caused by variable solar radiance. Visuino was used to complete this procedure because the UV sensor component is not present in any common simulation software. It is a powerful and simple visual programming language for Arduino that allows you to easily create and design programs with drag and drop. The Arduino UNO is used here, along with a display and a UV sensor module. Based on the variable values on the UV sensor we can see readings on the display which is managed by the microcontroller.

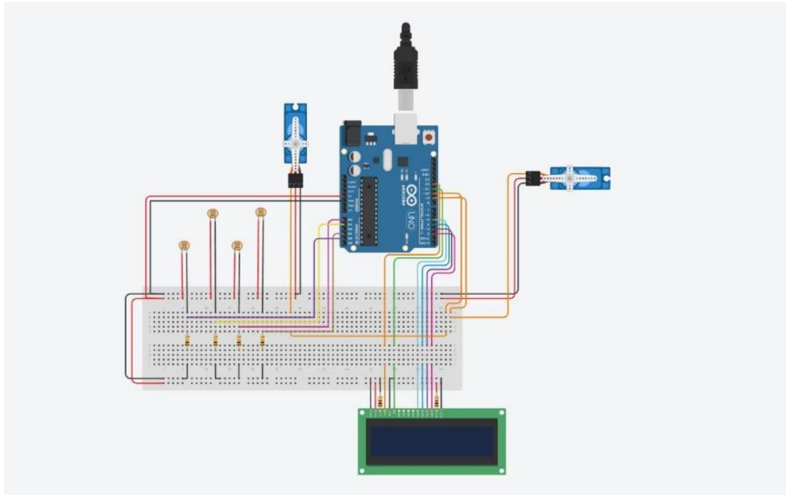

**Figure 4.2:** Simulation model of servo motors from variable solar radiance (in Tinker CAD)

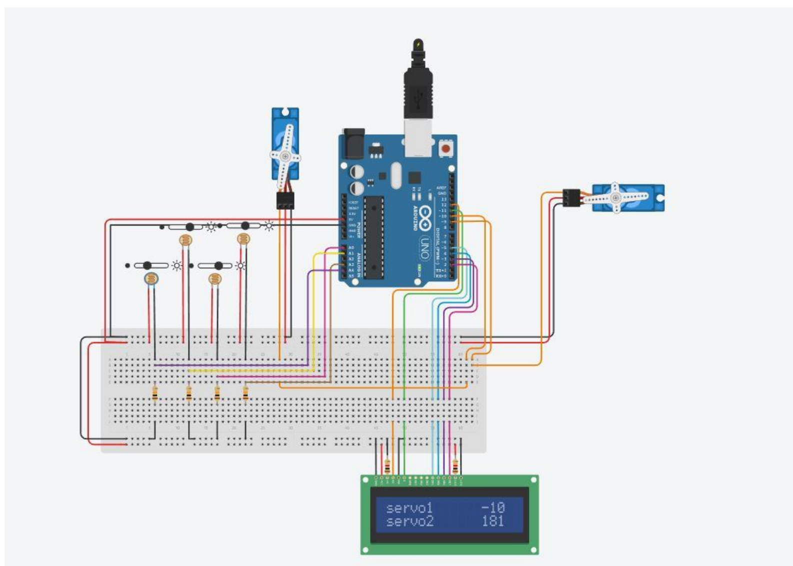


**Figure 4.3:** Rotation of servo motors from variable solar radiance (Tinker CAD)

### 4.3.2. Hardware Model

The complete setup of the project follows a step-by-step implementation procedure. At first the PV panel is setup on a suitable stand which is specifically designed for it. Next, the accelerometers are attached to the panel which controls the tilt of the panel. Four UV sensors are used on top which detects the UV rays from the sun. Using some wires, the output of the panel is connected to the voltage and current sensors which are connected to the Arduino Mega. A load is also connected to the current sensor. From the microcontroller a motor driver is attached in the digital pin and it is connected to the actuators. Moreover, after the data gets processed in Arduino then through ESP8266 Microcontroller it is sent to the database. After all the connections are done then a laptop is connected where the Arduino code is done and depending on the algorithm and codes provided the solar panel tilts a certain angle when it senses light a pause over there which therefore generates power for usage.

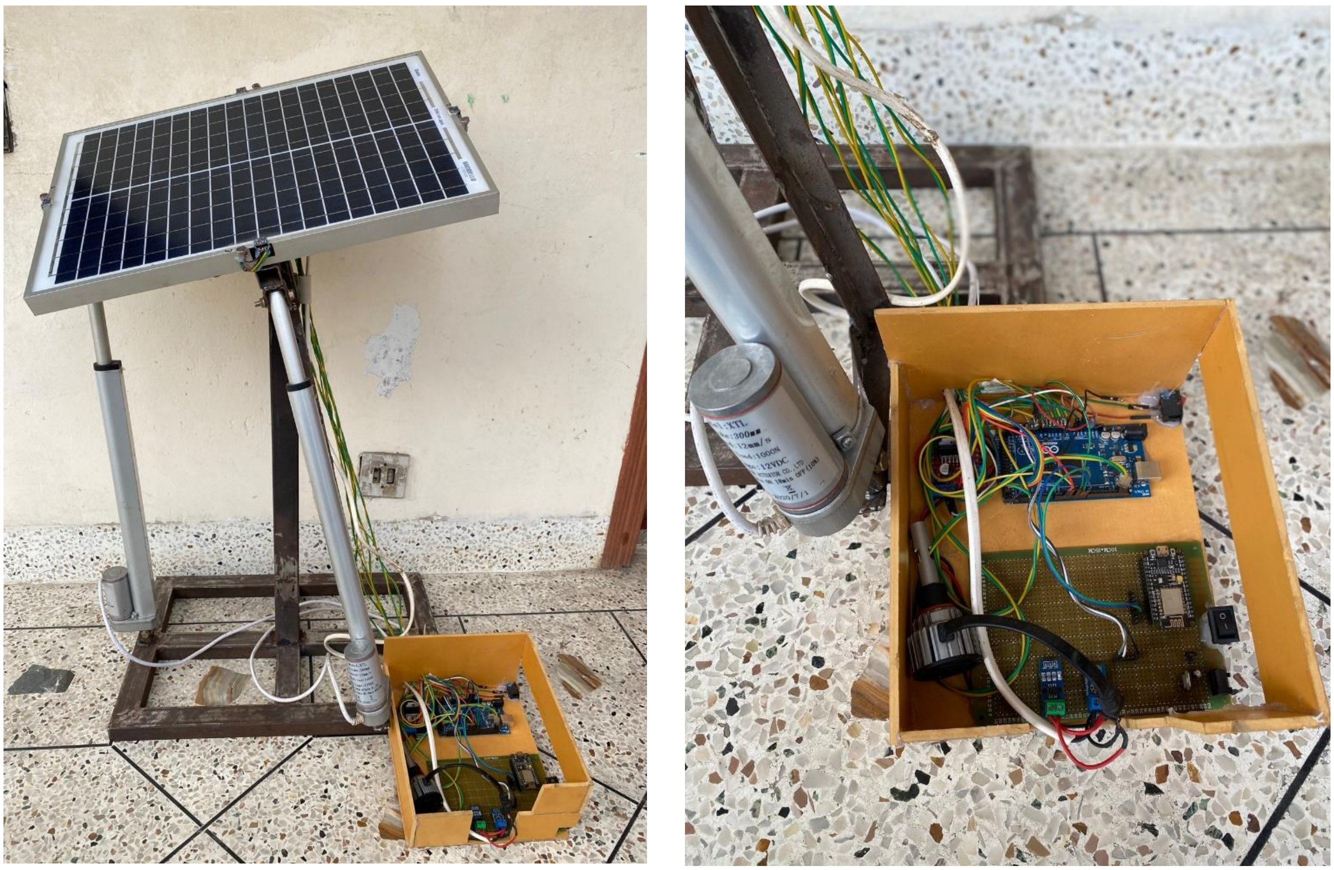

**Figure 4.4:** Hardware setup of the proposed system

## 4.4. Engineering Solution in Accordance with Professional Practices

Professional practice refers to the conduct and work of someone from a particular profession. Engineering solutions should always be synced with the professional practices and it must comply to the sustainability and public health safety. Engineers create, design and build, bringing solutions to problems and transforming the environment for betterment of life. They are responsible for the development of science and technology once they design tools and instruments. Engineering is responsible for the deep transformation of human relations in this century. A new era in working environment has started, which characteristics are peculiar due to new communications, mobility and globalization [30]. The engineering solution that we are proposing satisfies the ethical values of engineers as it hits the section of engineering ethics that works with environmental friendliness and public safety. The setup that we are using is free from hazards to the human body and also to the environment as a whole because by doing so we are literally using the UV rays and converting them into power. This is in a sense beneficial to the society and the professional practices are also in accordance with it. With the increasing challenges more complex, global and interdisciplinary contexts, different approaches to understanding how engineers practice and learn are required. The role of engineering is noteworthy in the field of economics and overall society as well because one engineering success leads to another and thus as a whole it ensures proper sustainability and the professional practices are also derivable from these [31]. It can be thus assured that the proposed concept of our dual axis solar tracker goes with the concept of professional practices as well as ethical and sustainability values accurately.

## 4.5. Summary

The main aim to improve the performance of the overall power generation was achieved through this project where dual axis solar based tracker is used that utilizes the UV rays of the sun through UV sensors and finally grants us maximum possible power output which can be used to drive different loads. The conventional single axis fixed solar PV panels provide limited amount of power which therefore again needs to be settled using different mechanisms and components but by utilizing this certain setup it can be overlooked. The entire process went through different hardware and software testing before it could be implemented to its final product form. Usage of Tinker CAD and Visuino software enabled to figure out a working system through which the final draft was prepared. Moreover, going through different Arduino coding structures the final working code was implemented which therefore provided us with the final developed system setup that grants maximum power output.

# Chapter 5

# RESULTS ANALYSIS & CRITICAL DESIGN REVIEW

## 5.1. Introduction

The goal of the project was to develop a Dual Axis PV Tracking System using UV sensors rather than the traditional method of using LDRs. It was done because UV Sensors are known to absorb UV radiation from the Sun and thus produce more power than LDR-based trackers. The tracker was exposed to sunlight, and the current and voltage for both the LDR and UV Sensor were measured. The output current and voltage were measured, and graphs were created using the data. When the tracker was used in LDR mode, the obtained voltage and current were lower than when it was used in UV Sensor mode. The graphs all showed the same concept, proving that the UV Sensor has a higher output and is more efficient than the LDR.

## 5.2. Results Analysis

During these times of power outages, relying on renewable energy is critical. As a result, the Dual Axis Tracker was designed with a UV Sensor to capture the maximum amount of energy from the Sun and generate more power, reducing the demand on non-renewable resources. The information was obtained from a rooftop. Due to the presence of heavy fog during the winter, it was difficult to absorb sunlight. The rotation of the panel also went out of control and displayed abnormal behavior at certain values. It was then tweaked by monitoring and modifying the code in the Arduino software.

### 5.2.1. Simulated Results

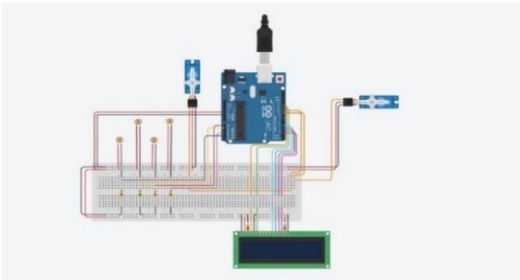

**(a)** Implementation on Tinker CAD

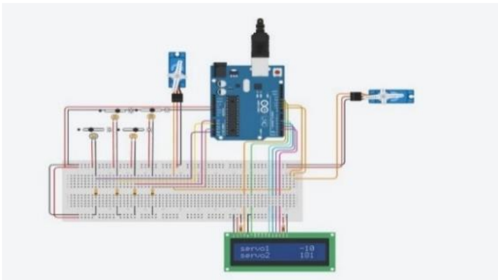

**(b):** Rotation of servomotors

**Figure 5.1:** Simulation of axis trackers on Tinker CAD

Because the UV Sensor was not available in any simulation software, the estimated voltage and current results could not be displayed. However, the rotation and degree of rotation could be clearly demonstrated.

### 5.2.2. Hardware Results


**(a)** Voltage and current from UV **(b)** Voltage and current from LDR

**Figure 5.2:** Obtained voltage and current from both UV Sensor and LDR

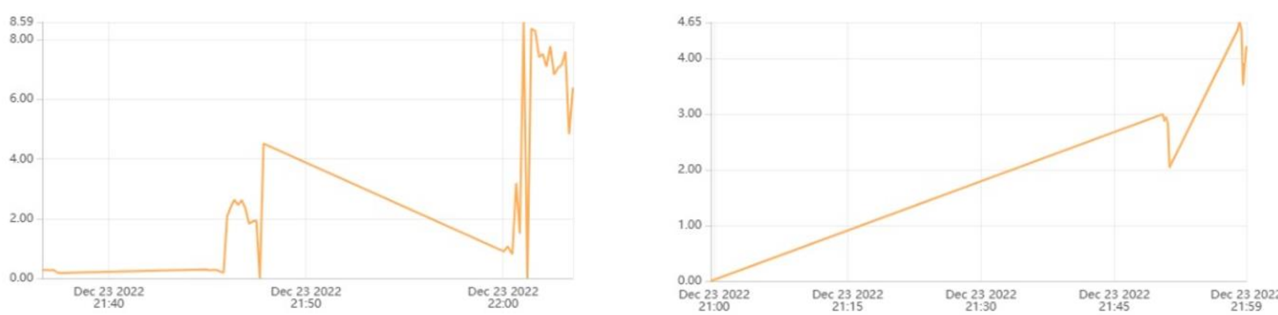


**(a)** Power vs. Time curve from UV **(b)** Power vs. Time curve from LDR

**Figure 5.3:** Obtained graphs from both UV Sensor and LDR

## 5.3. Comparison of Results

The observed voltage and current values using both UV Sensor and LDR, as well as the obtained Power-Time graphs, clearly show that the voltage and current sensors produced higher output when the tracker was run in UV Sensor mode. The traditional LDR mode produced slightly lower results. In UV Sensor mode, the current sensor reading was 0.49 A and the voltage sensor reading was 8.62 A based on the output. The current sensor reading for the LDR mode was 0.36 A, and the voltage sensor reading was 8.21 A. The peak observed power with the UV Sensor was 8.59 W, while the peak observed power with the LDR was 4.65 W. As a result, the observed difference was statistically significant.

## 5.4. Summary

The purpose of the project was to create a modified version of the conventional LDR tracker by using UV Sensors and show that the UV Sensor based tracker shows a higher output for voltage, current and power and is more efficient. The designed tracker was made using both UV sensor and LDR and can be operated in both modes, the modes could be changed by tweaking the code. By leveraging the benefits of UV radiation enhancement and UV sensor capability, we proposed a novel UV sensor-based dual-axis solar tracking system to improve tracking movements and PV energy generation. After the solar tracking system is implemented, four intensity signals of UV radiation obtained by UV sensors are compared and used as inputs to the system, which is capable of following the sun's trajectory through daily and elevation angles. The proposed solar tracking system's solar tracking performance is compared to that of a fixed flat-plate system and a conventional LDR-based solar tracking system in a comparative analysis. The experimental results show that our tracking system generates more energy than the fixed flat-plate system and the LDR-based solar tracking system. The proposed solar tracking system moves effectively, and the economic performance evaluation shows that the proposed tracking system is profitable, since the UV Sensor’s output voltage, current and power output was greater than the LDR’s.

## Chapter 6

# CONCLUSION

## 6.1. Summary of Findings

The Dual Axis PV Tracking System, which used UV sensors to operate, provided more power over a longer period of time. The same Tracking System has a mechanism to perform using LDRs, and the results show that UV tracking captures more power than LDR tracking.

## 6.2. Novelty of the Work

The use of UV sensors for tracking information and the use of motorized linear actuators for solar panel positioning distinguishes this project. During the literature review conducted prior to the start of project implementation, the paper [20] was the only research conducted that used UV sensors and linear actuators. Aside from that, all other reviewed literature was on LDR-based solar tracking or machine learning and neural network-based solar tracking systems. The main parameter considered was the use of a UV sensor, which could overcome certain limitations of LDRs, such as their ineffectiveness in low visibility conditions.

## 6.3. Cultural and Societal Factors and Impacts

The processes developed during the project's implementation took cultural and societal factors into account to a large extent. The entire world has placed a high value on green energy, of which solar energy is a major component. Though solar energy, or renewable energy in general, cannot fully replace fossil fuels as a source of energy due to technological advances and sheer feasibility, it is the responsibility of engineers and aspirant engineers to develop a more efficient system for green sustainable energy. Because society is the foundation of a nation, any technology and its implementation should be designed with societal acceptance in mind. The total cost of the project is less than 15,000 BDT, which is a reasonable price for a long-lasting system. A solution to this complex engineering problem was required to ensure this longevity and address the societal factors. This problem was classified as a complex engineering problem because it required depth of engineering knowledge, depth and originality in analysis, and the proposed tracking system had multiple components or subparts, including the electronic part, the sensor part, the IOT, and finally, the mechanical element.

The proposed design's implementation will have a significant impact on cultural and societal issues. This country's energy conservation and technological awareness will grow. Agriculture- and rural-economy-based societies will benefit greatly if this proposed solar tracking system is implemented on a domestic scale.

## 6.4. Limitations of the Work

The project was concerned with tracking solar panels efficiently using UV sensors. As a result, the scope was limited to renewable energy technologies, power electronics, microcontrollers, IOT, and very basic mechanical structure. The proposed dual axis tracker has four major limitations. The proposed axis tracker was tested on a 20W solar panel, which is not an ideal power specification for domestic use. Another limitation is that the linear actuator in this project is powered by an AC source that is converted to 12V DC via an adapter. A third limitation is that the UV sensors used have no cover above, so any physical touch by hand or any object directly to its filament could damage the sensors' calibrations. The final disadvantage is that, due to its low power specification, a powerful device powered by AC power was not connected during testing.

## 6.5. Future Scopes

All limitations can be solved and a proper engineering solution provided, but this was not possible in this case due to financial constraints. As a result, the above limitations are not technical, but rather financial. The linear actuator can provide enough force to turn 120-150 W solar panels. These were not used solely for economic reasons. If higher power rated panels were used, a buck converter could be used to supply power to the actuators. Similarly, due to higher power absorption, a common domestic load could be used to test and analyze the tracking system's performance when using an inverter. Finally, for the UV sensor, a 3D printed casing with a glass cover could be created to completely protect the sensor from any object.

## 6.6. Social, Economic, Cultural and Environmental Aspects

### 6.6.1. Sustainability

Some of the UN's 17 Sustainable Development Goals can be directly assessed and may be a suitable location for the proposed system's implementation. Goal 7 ensures that everyone has access to affordable, reliable, and sustainable energy. The proposed tracking system is specifically designed to accomplish this goal. Goal-8 promotes decent employment and economic growth. This goal can also be met through research and development of renewable energy technology. Goal-11 is to make cities and communities safe and sustainable, which is in line with our mission. Goal-13 calls for immediate action to combat climate change, which can only be accomplished if consumption of fossil fuels is drastically reduced, and the project can undoubtedly contribute to this change.

### 6.6.2. Economic and Cultural Factors

Section 6.3 went over cultural considerations. In terms of economics, the dual axis PV tracker used for this project has a distinct advantage. Given recent developments in the fossil fuel industry, now is the ideal time to generate green energy and transition to sustainable forms of energy on any scale possible. The initial cost of installing a solar tracker may be higher than that of other conventional fuels, but the breakeven time will be over in 5 years, and thus a net profit can be gained when compared to conventional fuels.

## 6.7. Conclusion

The primary goal of this project was to create a Dual Axis Solar Tracker that used UV Sensors to capture and convert as much solar energy as possible into usable electricity. The primary reason for using UV Sensors instead of LDRs was to overcome their limitations, such as light saturation and inefficiency in low-visibility situations, which could impair solar tracking performance. In order to achieve the goals, a thorough literature review was conducted, and it was discovered that the majority of solar trackers used LDRs, which is the primary novelty of this project. Summarize the entire project, beginning with the goals established and ending with the project's final outcome. A project schedule was created, followed by a SWOT, Cost, and PEST analysis. The tracking system was created using components such as a UV sensor, solar panel, Arduino, and linear actuator, and it is rightly classified as a critical engineering problem. Finally, after hardware implementation, result analysis revealed that the UV sensor-based tracker outperformed the LDR-based tracker, indicating that the goal was met and our project was deemed successful.

# REFERENCES

[1] (2022) Investindia website. [Online]. Available: http://www.investindia.gov.in/

[2]. 'China to remain leader in renewable energy capacity growth in 2022'. South China Morning Post.

[3] Jamroen, C., Fongkerd, C., Krongpha, W., Komkum, P., Pirayawaraporn, A. and Chindakham, N., "A novel UV sensor-based dual-axis solar tracking system: Implementation and performance analysis", *Applied Energy*, 299, p.117295.

[4] Engr. U ILO, F., Prof. Onoh, G.N. and Dr. Eke, J. "An Artificial Intelligent Based Solar Tracking System for Improving the Power Output of a Solar Cell", *International Journal of Engineering Research & Technology*, Vol. 3 Issue 11, 2014.

[5] Fathabadi, H., "Novel high accurate sensorless dual-axis solar tracking system controlled by maximum power point tracking unit of photovoltaic systems", *Applied Energy-173,* pp 448–459, 2016.

[6] Datta, S., Bhattacharya, S. and Roy, P., "Artificial Intelligence based Solar Panel Tilt Angle Optimization and its Hardware Implementation for Efficiency Enhancement", *International Journal of Advanced Research in Electrical, Electronics and Instrumentation Engineering*, Vol. 5, Issue 10, 2016.

[7] Kaysal, A.,"The Design of Two Axis Solar Tracking System Based on Fuzzy Logic Control and Efficiency Analysis", *International Journal of Advanced Research in Electrical, Electronics and Instrumentation Engineering*, Vol. 5, Issue 12, 2016.

[8] Mishra, J., Thakur, R. and Deep, A.,"Arduino based Dual Axis Smart Solar Tracker", *International Journal of Advanced Engineering, Management and Scienc*e, Volume-3, Issue-5, 2017.

[9] Abadi, I., Imran, C. and Fasa, N.,"Smart Solar Tracking System Based on Fuzzy-Pi Controller for Maximizing the Power of PV", in *AIP Conference Proceedings 2088*, 2019

[10] Jose A. Carballo, Bonilla, J., Berenguel, M., Fernández-Reche, J. and García, G.,"Machine Learning for Solar Trackers", in *AIP Conference Proceedings 2126*, 2019.

[11] Said, M. N. A. M., Jumaat, S. A. and Jawa, C. R. A., "Dual axis solar tracker with IoT monitoring system using Arduino", *International Journal of Power Electronics and Drive System*, Vol. 11, No. 1, pp 451-458, 2020.

[12] AL-Rousan, N., Isa, N. A. M. and Desa, M. K. M., "Efficient single and dual axis solar tracking system controllers based on adaptive neural fuzzy inference system", *Journal of King Saud University – Engineering Sciences-32*, pp 459-469, 2020.

[13] Faraji, J., Khanjanianpak, M. and Rezaei, M., "Fast-Accurate Dual-Axis Solar Tracker Controlled by P&O Technique with Neural Network Optimization", in *IEEE Xplore*, 2020.

[14] Tharakan, R. A., Joshi, R., Ravindran, G. and Jayapandian, N., “Machine Learning Approach for Automatic Solar Panel Direction by using Naïve Bayes Algorithm”, in *IEEE Xplore Part Number: CFP21K74-ART*, 2021.

[15] Saymbetov, A., Mekhilef, S., Kuttybay, N., Nurgaliyev, M., Tukymbekov, D., Meiirkhanov, A., Dosymbetova, G., & Svanbayev, Y. (2021), “Dual-axis schedule tracker with an adaptive algorithm for a strong scattering of sunbeam”, in *Solar Energy*, *224*, 285–297.

[16] Veena KN, Nikhita Jalapure, “An intelligence technique to maximize power generation using solar panel and its maintenance”, *Turkish Journal of Computer and Mathematics Education, Vol 12 No 13, 2021*

[17] Ahmad, S., Razali, A., & Misrun, M. (2021). “Effective and Low-Cost Arduino based Dual-Axis Solar Tracker”. *Journal of Physics: Conference Series*, *1878*(1), 012049.

[18] Pulungan, A. B. (2021). “IMPROVEMENT OF A SOLAR PANEL TRACKING SYSTEM USING ADDITIONAL MASS POSITION ADJUSTMENT”, in *International Journal of GEOMATE*, *21*(86).

[19] Jamroen, C., Fongkerd, C., Krongpha, W., Komkum, P., Pirayawaraporn, A., & Chindakham, N. (2021). “A novel UV sensor-based dual-axis solar tracking system: Implementation and performance analysis”. *Applied Energy*, *299*, 117295.

[20] Wu, C. H., Wang, H. C., & Chang, H. Y. (2022). “Dual-axis solar tracker with satellite compass and inclinometer for automatic positioning and tracking”. *Energy for Sustainable Development*, *66*, 308–318.

[21] Wang, S., Shen, Y., Zhou, J., Li, C., & Ma, L. (2022). “Efficiency Enhancement of Tilted Bifacial Photovoltaic Modules with Horizontal Single-Axis Tracker—The Bifacial Companion Method”. *Energies*, *15*(4), 1262.

[22] Jamroen, C., Fongkerd, C., Krongpha, W., Komkum, P., Pirayawaraporn, A., & Chindakham, N. (2021b). A novel UV sensor-based dual-axis solar tracking system: Implementation and performance analysis. *Applied Energy*, *299*, 117295.

[23] M.L., B., Bhatt, V., Kumar, V. R., Sharma, R. J., S., H., Pant, B., Arani, R. P., Sathish, T., & Mohanavel, V. (2022). “Developing a dual axis photoelectric tracking module using a multi quadrant photoelectric device”. *Energy Reports*, *8*, 1426–1439.

[24] Parra, S., Malato, S., & Pulgarin, C. (2002). “New integrated photocatalytic-biological flow system using supported TiO2 and fixed bacteria for the mineralization of isoproturon”,.*Applied Catalysis B: Environmental*, *36*(2), 131–144.

[25] Rotar, R., Jurj, S. L., Susany, R., Opritoiu, F., & Vladutiu, M. (2021). “Global Energy Production Computation of a Solar-Powered Smart Home Automation System Using Reliability-Oriented Metrics”. *Energies*, *14*(9), 2541.

 

[26] Goel, C., & Yoo, S. (2021). Hybrid daylight harvesting system using static ball lens concentrator and movable optical fiber. *Solar Energy*, *216*, 121–132.

[27] Barsoum, N. (2011). Fabrication of Dual-Axis Solar Tracking Controller Project. *Intelligent Control and Automation*, *02*(02), 57–68.

[28] Zarei Zohdi, H., & Sarvi, M. (2023). Optimal and Economic Evaluation of using a Two-axis Solar Tracking System in Photovoltaic Power Plants, a Case Study of "Tehran", Iran. *Journal of Solar Energy Research*, *8*(1), 1211-1221

[29] Chhoton, A. C., & Chakraborty, N. R. (2017). Dual axis solar tracking system-A comprehensive study: Bangladesh context. *2017 4th International Conference on Advances in Electrical Engineering (ICAEE)*

[30] Brito, Claudio & Ciampi, Melany & Vasconcelos, Rosa & Amaral, Luis & Barros, Victor. (2013). ENGINEERING IMPACTING SOCIAL, ECONOMICAL AND WORKING ENVIRONMENT.

[31] Reich, A., Rooney, D., Gardner, A., Willey, K., Boud, D., & Fitzgerald, T. (2014). Engineers' professional learning: a practice-theory perspective. *European Journal of Engineering Education*, *40*(4), 366–379.

 

# Appendix A

# Datasheet of the ICs used

# POSITIVE VOLTAGE REGULATORS

- OUTPUT CURRENT TO 1.5A
- OUTPUT VOLTAGES OF 5; 5.2; 6; 8; 8.5; 9; 10; 12; 15; 18; 24V
- THERMAL OVERLOAD PROTECTION
- SHORT CIRCUIT PROTECTION
- OUTPUT TRANSITION SOA PROTECTION

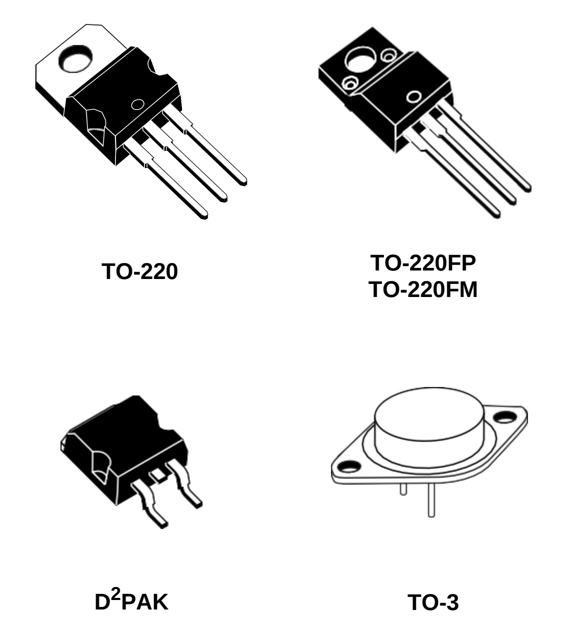


## DESCRIPTION

The L7800 series of three-terminal positive regulators is available in TO-220, TO-220FP, TO-220FM, TO-3 and D$^2$PAK packages and several fixed output voltages, making it useful in a wide range of applications. These regulators can provide local on-card regulation, eliminating the distribution problems associated with single point regulation. Each type employs internal current limiting, thermal shut-down and safe area protection, making it essentially indestructible. If adequate heat sinking is provided, they can deliver over 1A output current. Although designed primarily as fixed voltage regulators, these devices can be used with external components to obtain adjustable voltage and currents.

**Figure 1: Schematic Diagram**

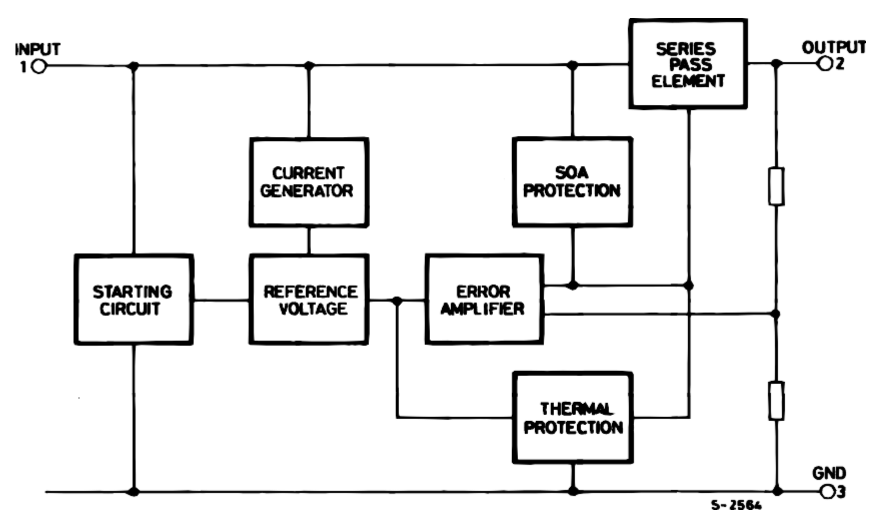

### Table 1: Absolute Maximum Ratings

| Symbol | Parameter | | Value | Unit |
|---|---|---|---|---|
| $V_I$ | DC Input Voltage | for $V_O$= 5 to 18V | 35 | V |
| | | for $V_O$= 20, 24V | 40 | |
| $I_O$ | Output Current | | Internally Limited | |
| $P_{tot}$ | Power Dissipation | | Internally Limited | |
| $T_{stg}$ | Storage Temperature Range | | -65 to 150 | °C |
| $T_{op}$ | Operating Junction Temperature Range | for L7800 | -55 to 150 | °C |
| | | for L7800C | 0 to 150 | |

Absolute Maximum Ratings are those values beyond which damage to the device may occur. Functional operation under these condition is not implied.

### Table 2: Thermal Data

| Symbol | Parameter | $D^2PAK$ | TO-220 | TO-220FP | TO-220FM | TO-3 | Unit |
|---|---|---|---|---|---|---|---|
| $R_{thj-case}$ | Thermal Resistance Junction-case Max | 3 | 5 | 5 | 5 | 4 | °C/W |
| $R_{thj-amb}$ | Thermal Resistance Junction-ambient Max | 62.5 | 50 | 60 | 60 | 35 | °C/W |

### Figure 2: Schematic Diagram

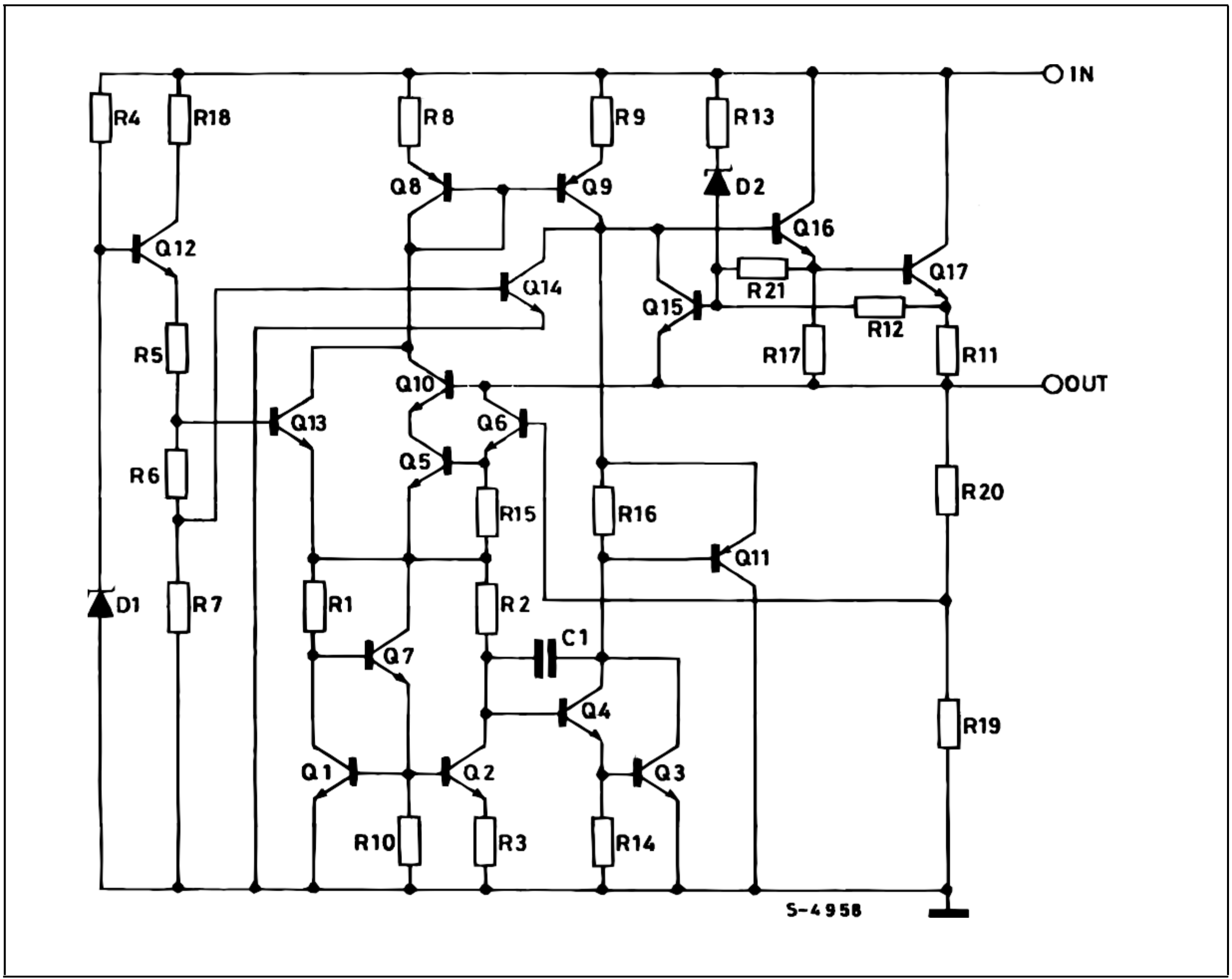

**Figure 3: Connection Diagram** (top view)

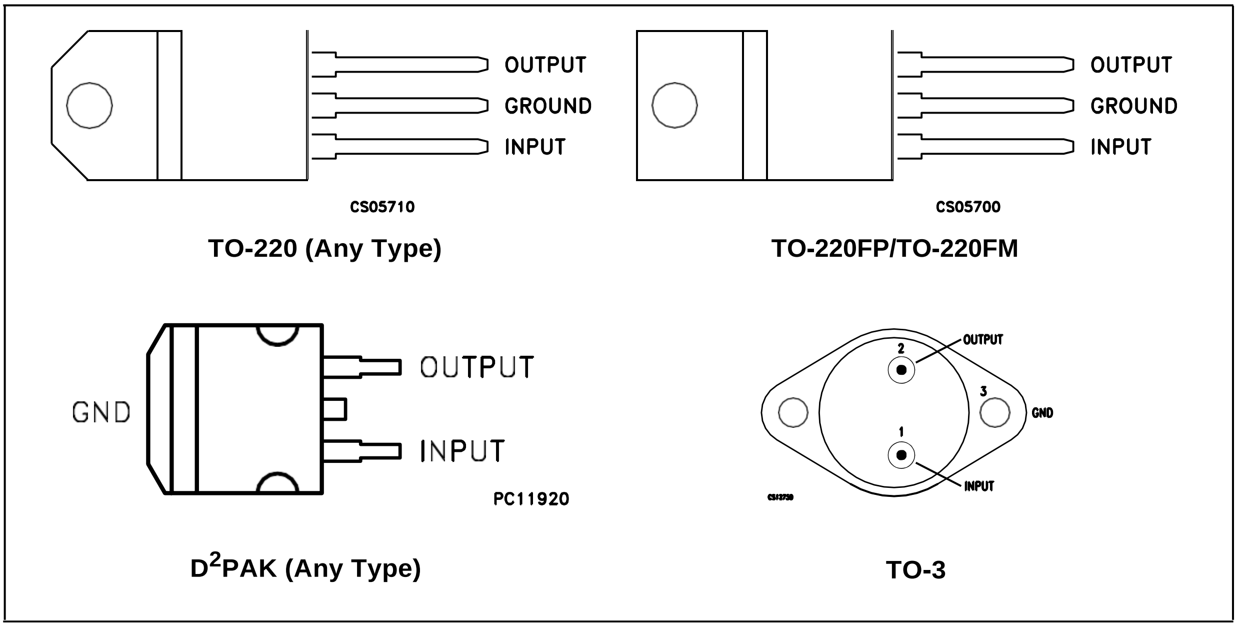


**Table 3: Order Codes**

| TYPE | TO-220 (A Type) | TO-220 (C Type) | TO-220 (E Type) | $D^2$PAK (A Type) (*) | $D^2$PAK (C Type) (T & R) | TO-220FP | TO-220FM | TO-3 |
|---|---|---|---|---|---|---|---|---|
| L7805 | | | | | | | | L7805T |
| L7805C | L7805CV | L7805C-V | L7805CV1 | L7805CD2T | L7805C-D2TR | L7805CP | L7805CF | L7805CT |
| L7852C | L7852CV | | | L7852CD2T | | L7852CP | L7852CF | L7852CT |
| L7806 | | | | | | | | L7806T |
| L7806C | L7806CV | L7806C-V | | L7806CD2T | | L7806CP | L7806CF | L7806CT |
| L7808 | | | | | | | | L7808T |
| L7808C | L7808CV | L7808C-V | | L7808CD2T | | L7808CP | L7808CF | L7808CT |
| L7885C | L7885CV | | | L7885CD2T | | L7885CP | L7885CF | L7885CT |
| L7809C | L7809CV | L7809C-V | | L7809CD2T | | L7809CP | L7809CF | L7809CT |
| L7810C | L7810CV | | | L7810CD2T | | L7810CP | | |
| L7812 | | | | | | | | L7812T |
| L7812C | L7812CV | L7812C-V | | L7812CD2T | | L7812CP | L7812CF | L7812CT |
| L7815 | | | | | | | | L7815T |
| L7815C | L7815CV | L7815C-V | | L7815CD2T | | L7815CP | L7815CF | L7815CT |
| L7818 | | | | | | | | L7818T |
| L7818C | L7818CV | | | L7818CD2T | | L7818CP | L7818CF | L7818CT |
| L7820 | | | | | | | | L7820T |
| L7820C | L7820CV | | | L7820CD2T | | L7820CP | L7820CF | L7820CT |
| L7824 | | | | | | | | L7824T |
| L7824C | L7824CV | | | L7824CD2T | | L7824CP | L7824CF | L7824CT |

(*) Available in Tape & Reel with the suffix "-TR".

**Figure 4: Application Circuits**

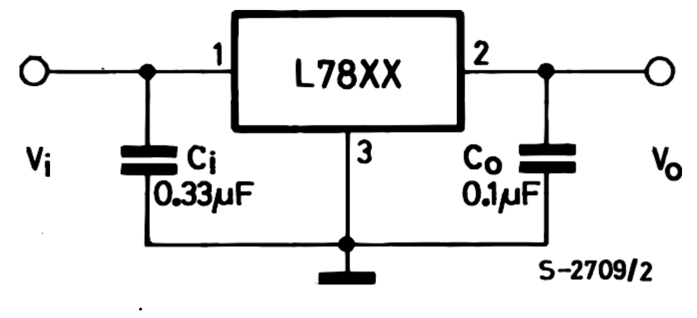


**TEST CIRCUITS**

**Figure 5: DC Parameter**

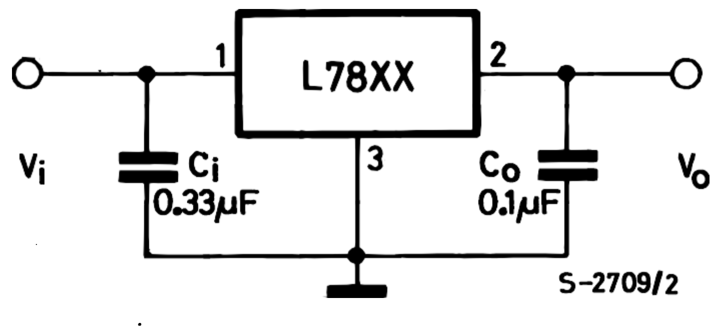


**Figure 6: Load Regulation**

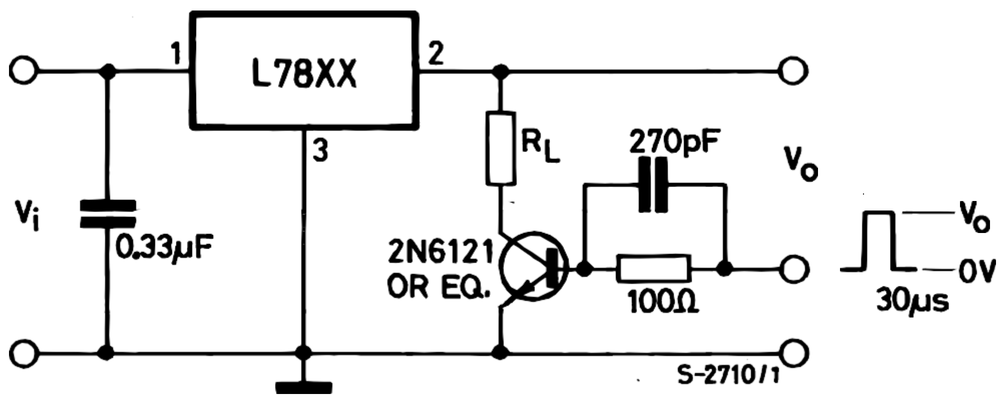

**Figure 7: Ripple Rejection**

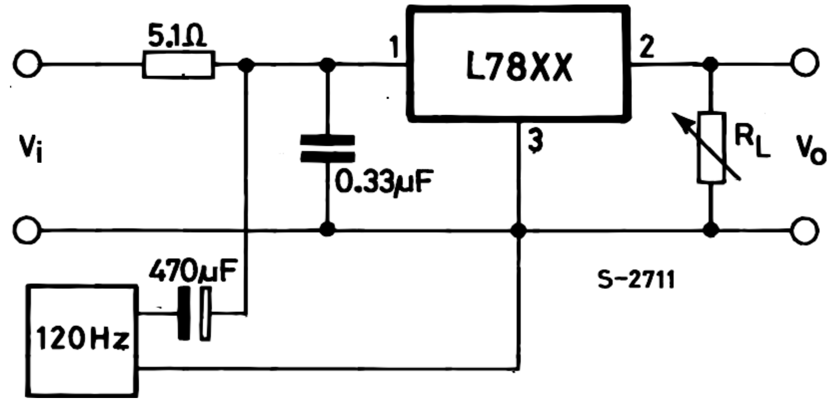


**Table 4: Electrical Characteristics Of L7805** (refer to the test circuits, $T_J$ = -55 to 150°C, $V_I$ = 10V, $I_O$ = 500 mA, $C_I$ = 0.33 µF, $C_O$ = 0.1 µF unless otherwise specified).

| Symbol | Parameter | Test Conditions | Min. | Typ. | Max. | Unit |
|---|---|---|---|---|---|---|
| $V_O$ | Output Voltage | $T_J$ = 25°C | 4.8 | 5 | 5.2 | V |
| $V_O$ | Output Voltage | $I_O$ = 5 mA to 1 A $P_O \leq$ 15W<br>$V_I$ = 8 to 20 V | 4.65 | 5 | 5.35 | V |
| $\Delta V_O$(*) | Line Regulation | $V_I$ = 7 to 25 V $T_J$ = 25°C | | 3 | 50 | mV |
| | | $V_I$ = 8 to 12 V $T_J$ = 25°C | | 1 | 25 | |
| $\Delta V_O$(*) | Load Regulation | $I_O$ = 5 mA to 1.5 A $T_J$ = 25°C | | | 100 | mV |
| | | $I_O$ = 250 to 750 mA $T_J$ = 25°C | | | 25 | |
| $I_d$ | Quiescent Current | $T_J$ = 25°C | | | 6 | mA |
| $\Delta I_d$ | Quiescent Current Change | $I_O$ = 5 mA to 1 A | | | 0.5 | mA |
| | | $V_I$ = 8 to 25 V | | | 0.8 | |
| $\Delta V_O/\Delta T$ | Output Voltage Drift | $I_O$ = 5 mA | | 0.6 | | mV/°C |
| eN | Output Noise Voltage | B =10Hz to 100KHz $T_J$ = 25°C | | | 40 | µV/$V_O$ |
| SVR | Supply Voltage Rejection | $V_I$ = 8 to 18 V f = 120Hz | 68 | | | dB |
| $V_d$ | Dropout Voltage | $I_O$ = 1 A $T_J$ = 25°C | | 2 | 2.5 | V |
| $R_O$ | Output Resistance | f = 1 KHz | | 17 | | mΩ |
| $I_{sc}$ | Short Circuit Current | $V_I$ = 35 V $T_J$ = 25°C | | 0.75 | 1.2 | A |
| $I_{scp}$ | Short Circuit Peak Current | $T_J$ = 25°C | 1.3 | 2.2 | 3.3 | A |

(*) Load and line regulation are specified at constant junction temperature. Changes in $V_O$ due to heating effects must be taken into account separately. Pulse testing with low duty cycle is used.

**Figure 8:** Dropout Voltage vs Junction Temperature

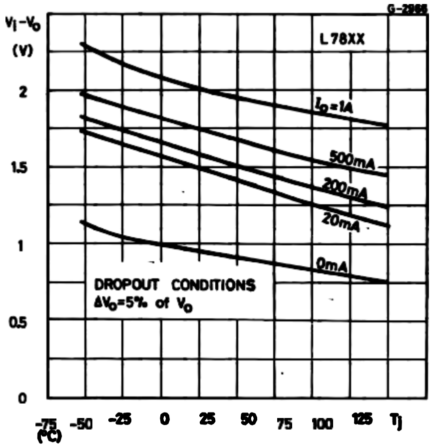


**Figure 9:** Peak Output Current vs Input/output Differential Voltage

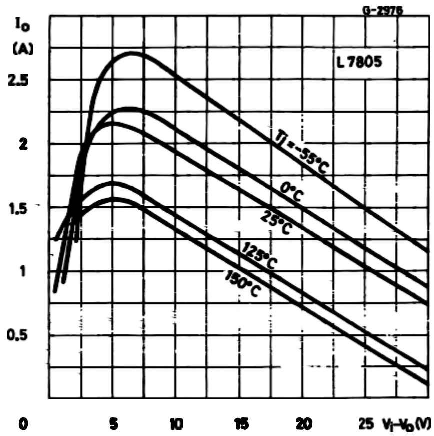

**Figure 10:** Supply Voltage Rejection vs Frequency

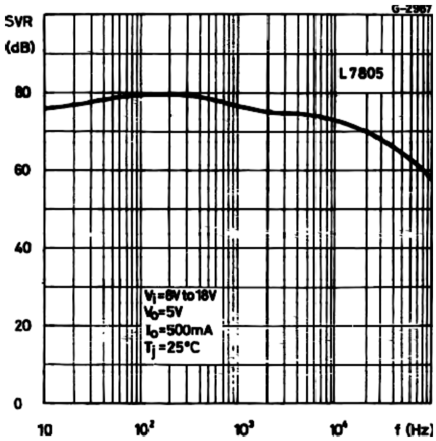


**Figure 11:** Output Voltage vs Junction Temperature

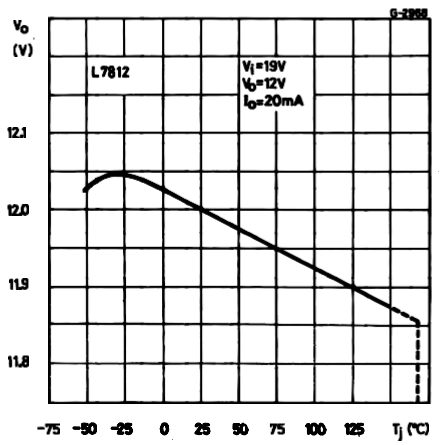


**Figure 12:** Output Impedance vs Frequency

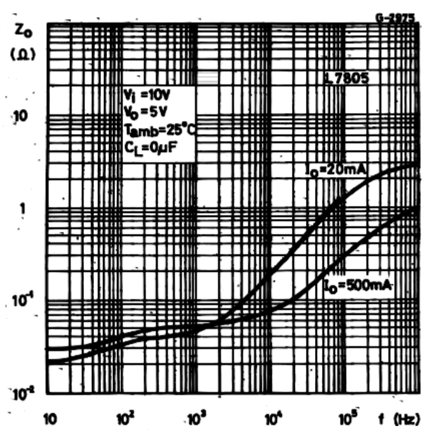


**Figure 13:** Quiescent Current vs Junction Temperature

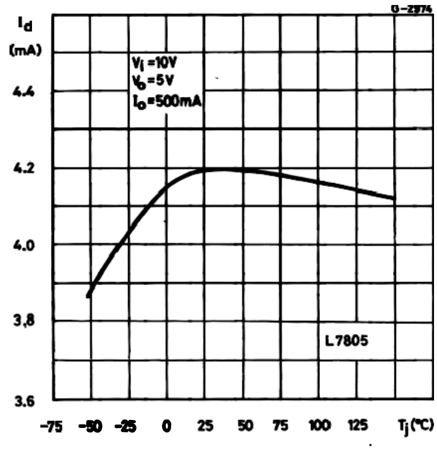


**Figure 14:** Load Transient Response

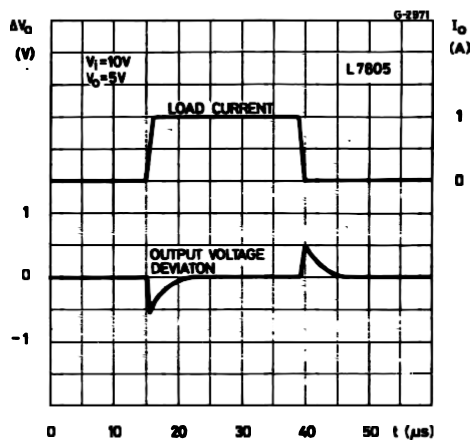


**Figure 15:** Line Transient Response

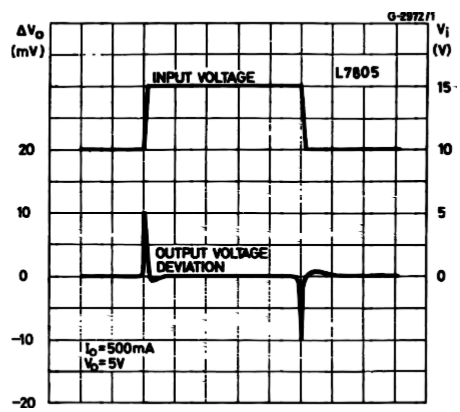

**Figure 16:** Quiescent Current vs Input Voltage

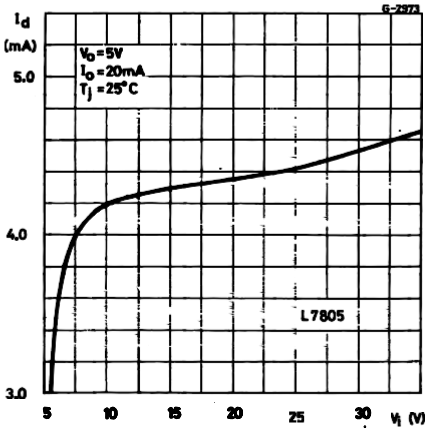


**Figure 17: Fixed Output Regulator**

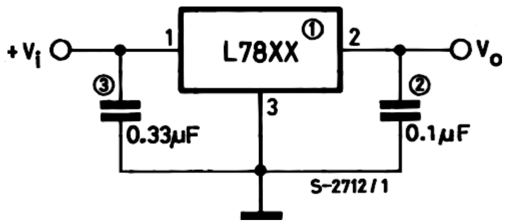


NOTE:
1. To specify an output voltage, substitute voltage value for "XX".
2. Although no output capacitor is need for stability, it does improve transient response.
3. Required if regulator is locate an appreciable distance from power supply filter.

**Figure 18: Current Regulator**

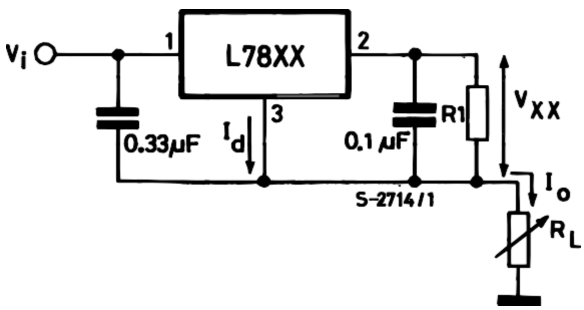


$$I_O = \frac{V_{xx}}{R_1} + I_d$$

**Figure 19: Circuit for Increasing Output Voltage**

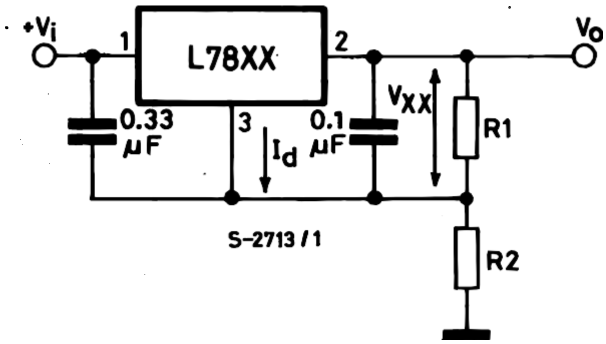


$I_{R1} \geq 5\ Id$

$V_O = V_{XX}\left(1+\frac{R_2}{R_1}\right) + I_d R_2$

**Figure 20: Adjustable Output Regulator (7 to 30V)**

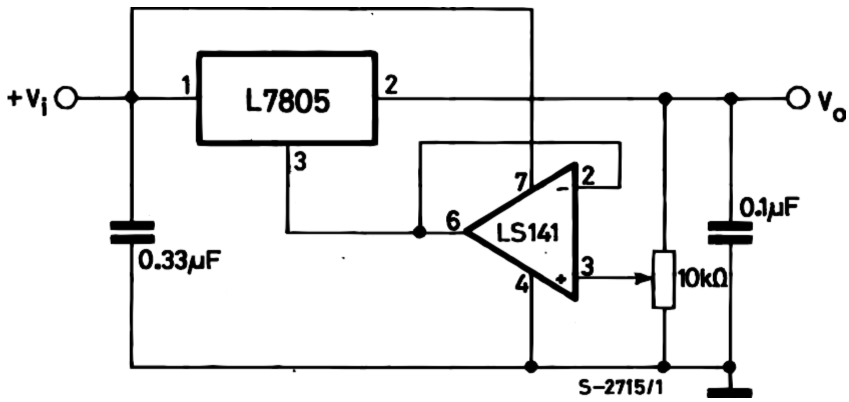


**Figure 21: 0.5 to 10V Regulator**

$V_O = V_{xx}\frac{R_4}{R_1}$

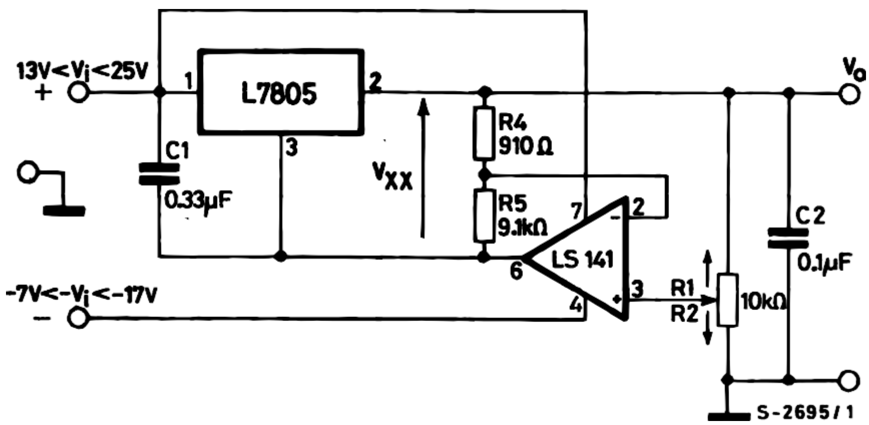

**Figure 22: High Current Voltage Regulator**

$$R_1 = \frac{V_{BEQ1}}{I_{REQ} - I_{Q1}}$$

$$I_O = I_{REG} + Q_1 \left(I_{REG} - \frac{V_{BEQ1}}{R_1}\right)$$

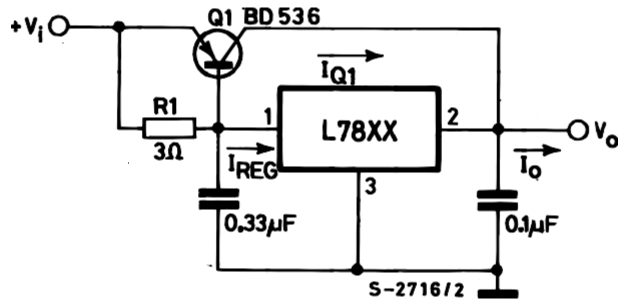


**Figure 23: High Output Current with Short Circuit Protection**

$$R_{SC} = \frac{V_{BEQ2}}{I_{SC}}$$

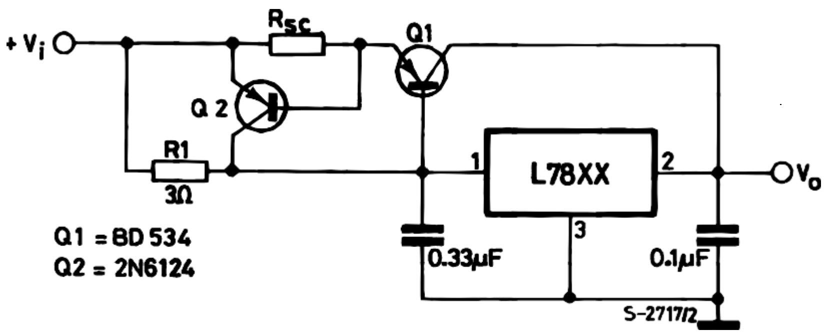


**Figure 24: Tracking Voltage Regulator**

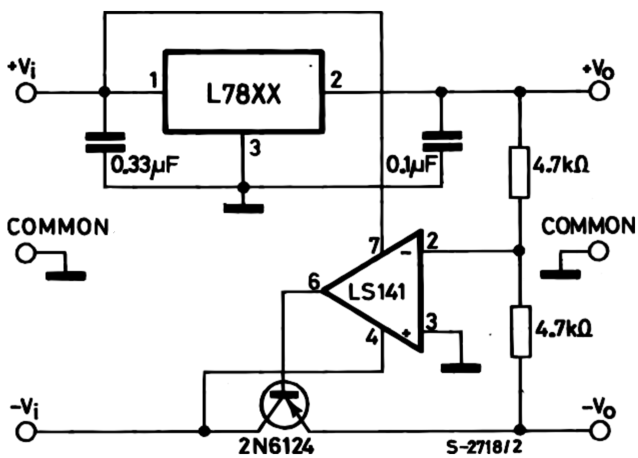

**Figure 25: Split Power Supply (± 15V - 1 A)**

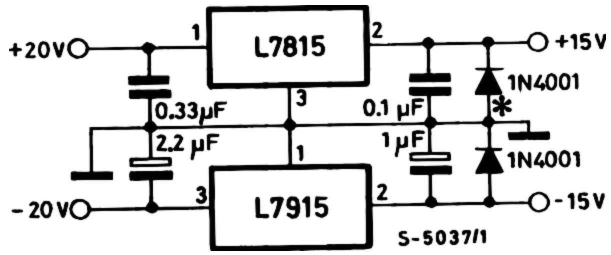


* Against potential latch-up problems.

**Figure 26: Negative Output Voltage Circuit**

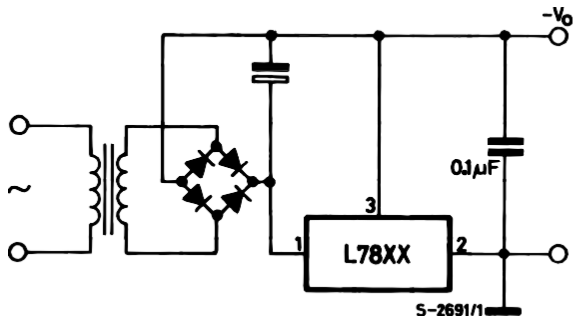


**Figure 27: Switching Regulator**

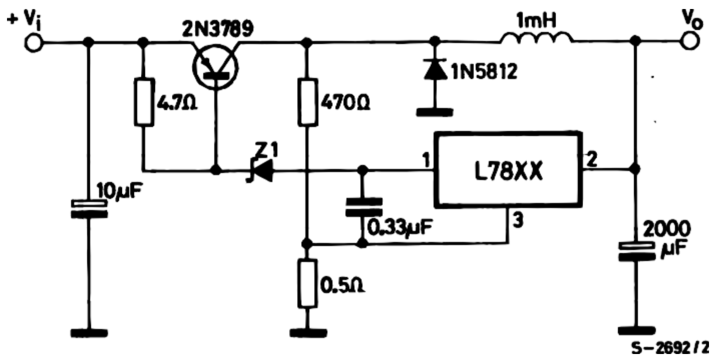

**Figure 28: High Input Voltage Circuit**

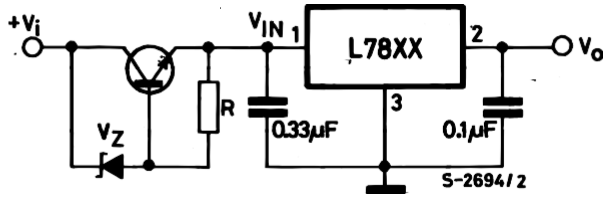


**Figure 29: High Input Voltage Circuit**

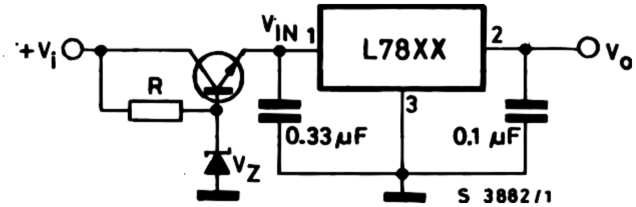


**Figure 30: High Output Voltage Regulator**

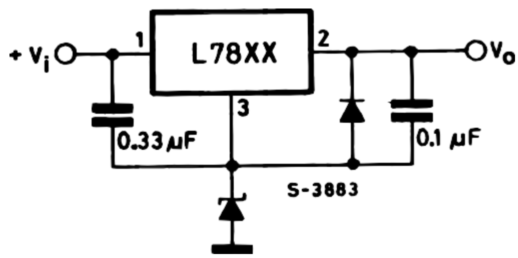


**Figure 31: High Input and Output Voltage**

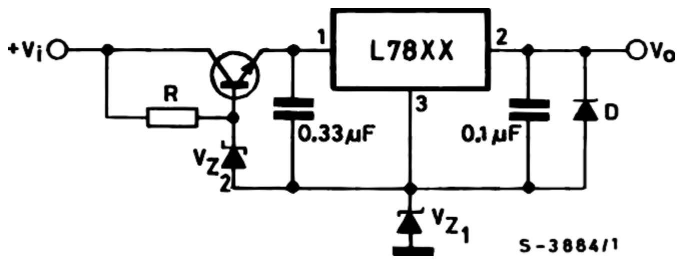

**Figure 32: Reducing Power Dissipation with Dropping Resistor**

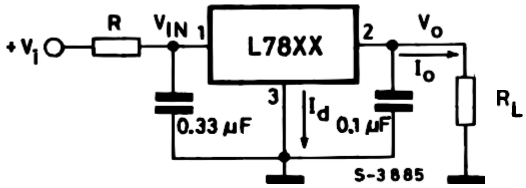


$$R = \frac{V_{I(min)} - V_{XX} - V_{DROP(max)}}{I_{O(max)} + I_{d(max)}}$$

**Figure 33: Remote Shutdown**

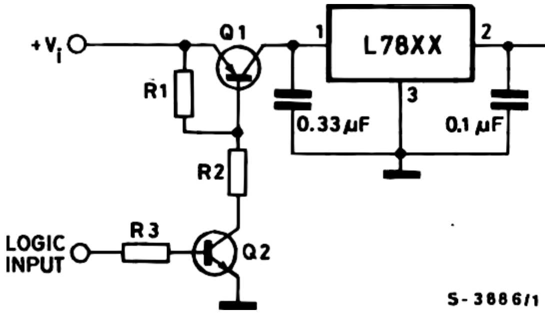


**Figure 34: Power AM Modulator (unity voltage gain, $I_O \leq 0.5$)**

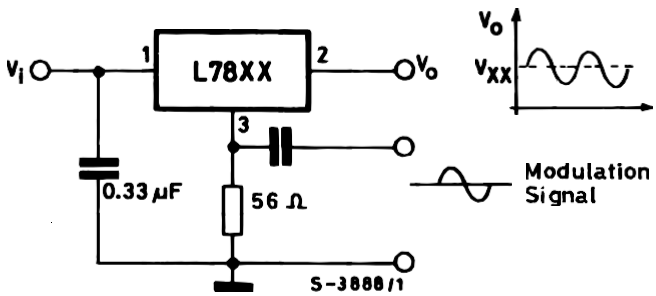


NOTE: The circuit performs well up to 100 KHz.

**Figure 35: Adjustable Output Voltage with Temperature Compensation**

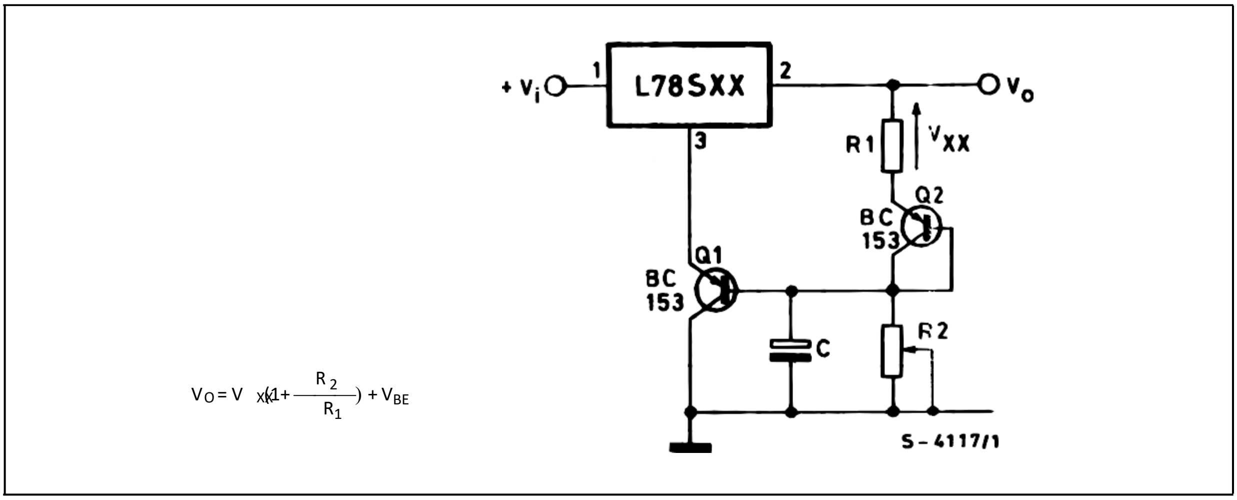


NOTE: $Q_2$ is connected as a diode in order to compensate the variation of the $Q_1$ $V_{BE}$ with the temperature. C allows a slow rise time of the $V_O$.

**Figure 36: Light Controllers ($V_{Omin} = V_{XX} + V_{BE}$)**

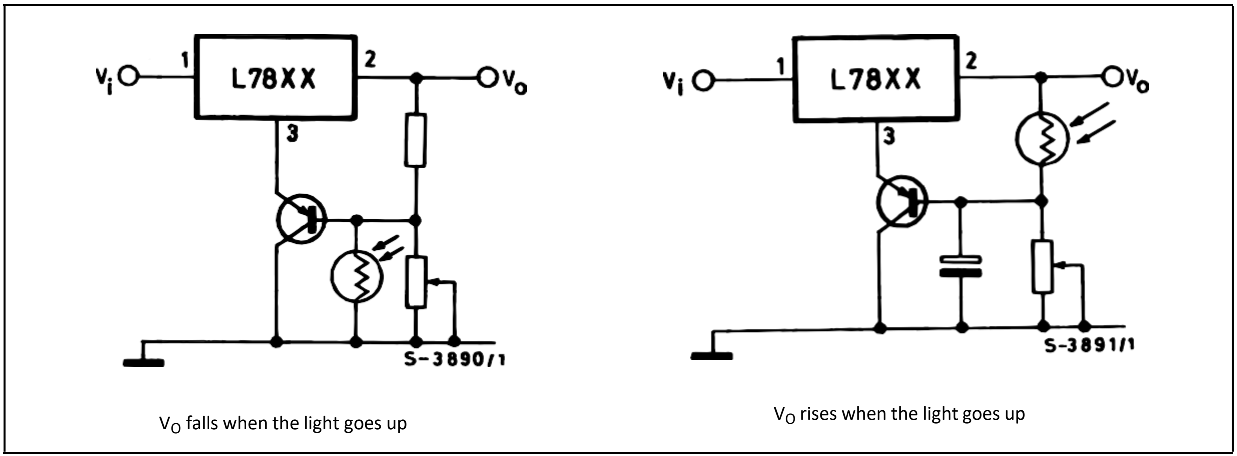


**Figure 37: Protection against Input Short-Circuit with High Capacitance Loads**

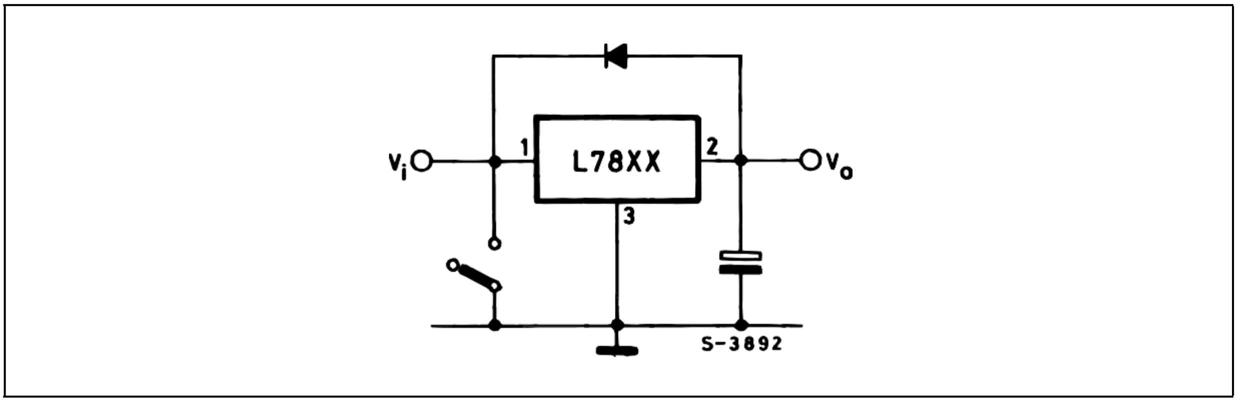


Application with high capacitance loads and an output voltage greater than 6 volts need an external diode (see fig. 33) to protect the device against input short circuit. In this case the input voltage falls rapidly while the output voltage decrease slowly. The capacitance discharges by means of the Base-Emitter junction of the series pass transistor in the regulator. If the energy is sufficiently high, the transistor may be destroyed. The external diode by-passes the current from the IC to ground.

# TO-3 MECHANICAL DATA

| DIM. | mm. | | | inch | | |
|---|---|---|---|---|---|---|
| | MIN. | TYP | MAX. | MIN. | TYP. | MAX. |
| A | | 11.85 | | | 0.466 | |
| B | 0.96 | 1.05 | 1.10 | 0.037 | 0.041 | 0.043 |
| C | | | 1.70 | | | 0.066 |
| D | | | 8.7 | | | 0.342 |
| E | | | 20.0 | | | 0.787 |
| G | | 10.9 | | | 0.429 | |
| N | | 16.9 | | | 0.665 | |
| P | | | 26.2 | | | 1.031 |
| R | 3.88 | | 4.09 | 0.152 | | 0.161 |
| U | | | 39.5 | | | 1.555 |
| V | | 30.10 | | | 1.185 | |

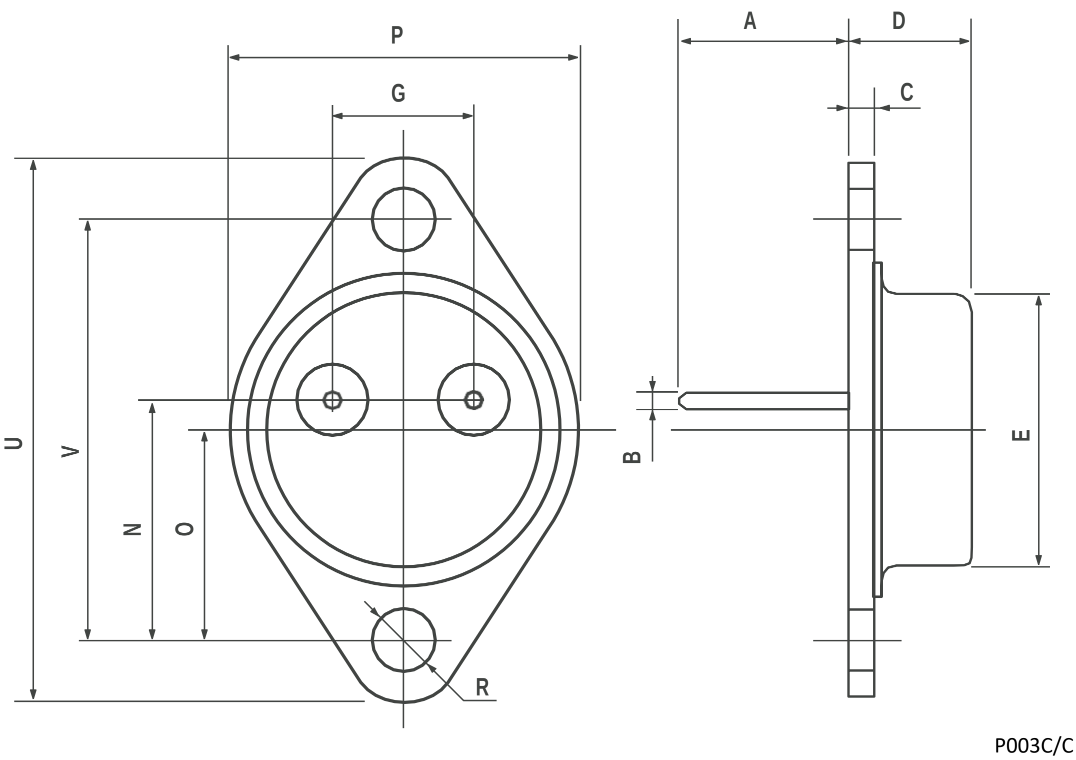

# TO-220 (A TYPE) MECHANICAL DATA

| DIM. | mm. | | | inch | | |
|---|---|---|---|---|---|---|
| | MIN. | TYP | MAX. | MIN. | TYP. | MAX. |
| A | 4.40 | | 4.60 | 0.173 | | 0.181 |
| b | 0.61 | | 0.88 | 0.024 | | 0.034 |
| b1 | 1.15 | | 1.70 | 0.045 | | 0.067 |
| c | 0.49 | | 0.70 | 0.019 | | 0.027 |
| D | 15.25 | | 15.75 | 0.600 | | 0.620 |
| E | 10.0 | | 10.40 | 0.393 | | 0.409 |
| e | 2.4 | | 2.7 | 0.094 | | 0.106 |
| e1 | 4.95 | | 5.15 | 0.194 | | 0.203 |
| F | 1.23 | | 1.32 | 0.048 | | 0.051 |
| H1 | 6.2 | | 6.6 | 0.244 | | 0.260 |
| J1 | 2.40 | | 2.72 | 0.094 | | 0.107 |
| L | 13.0 | | 14.0 | 0.511 | | 0.551 |
| L1 | 3.5 | | 3.93 | 0.137 | | 0.154 |
| L20 | | 16.4 | | | 0.645 | |
| L30 | | 28.9 | | | 1.138 | |
| ϕP | 3.75 | | 3.85 | 0.147 | | 0.151 |
| Q | 2.65 | | 2.95 | 0.104 | | 0.116 |

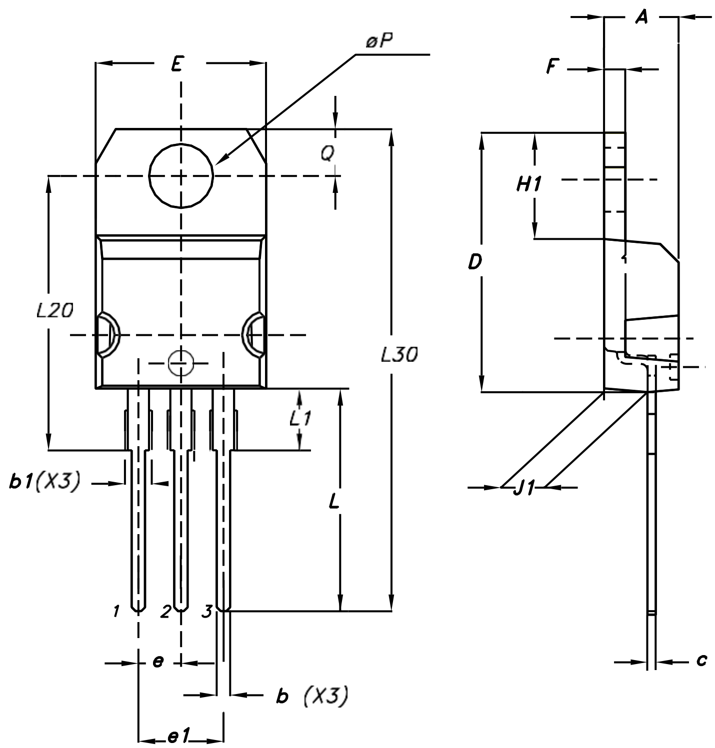

# TO-220 (C TYPE) MECHANICAL DATA

| DIM. | mm. | | | inch | | |
|---|---|---|---|---|---|---|
| | MIN. | TYP | MAX. | MIN. | TYP. | MAX. |
| A | 4.30 | | 4.70 | 0.169 | | 0.185 |
| b | 0.70 | | 0.90 | 0.028 | | 0.035 |
| b1 | 1.42 | | 1.62 | 0.056 | | 0.064 |
| c | 0.45 | | 0.60 | 0.018 | | 0.024 |
| D | | 15.70 | | | 0.618 | |
| E | 9.80 | | 10.20 | 0.386 | | 0.402 |
| e | | 2.54 | | | 0.100 | |
| e1 | | 5.08 | | | 0.200 | |
| F | 1.25 | | 1.39 | 0.049 | | 0.055 |
| H1 | | 6.5 | | | 0.256 | |
| J1 | 2.20 | | 2.60 | 0.087 | | 0.202 |
| L | 12.88 | | 13.28 | 0.507 | | 0.523 |
| L1 | | 3 | | | 0.118 | |
| L20 | 15.70 | | 16.1 | 0.618 | | 0.634 |
| L30 | | 28.9 | | | 1.138 | |
| ϕP | 3.50 | | 3.70 | 0.138 | | 0.146 |
| Q | 2.70 | | 2.90 | 0.106 | | 0.114 |

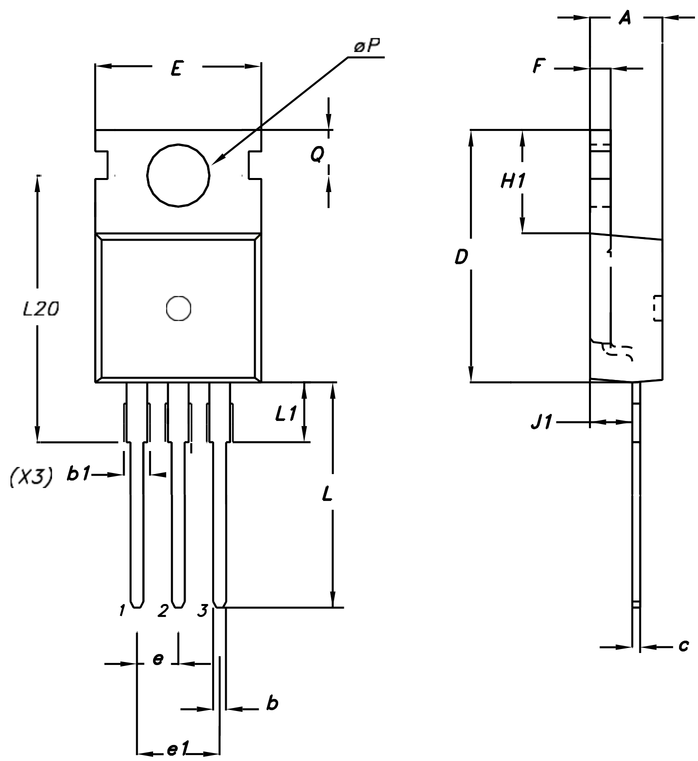

# TO-220 (E TYPE) MECHANICAL DATA

| DIM. | mm. | | | inch | | |
|---|---|---|---|---|---|---|
| | MIN. | TYP | MAX. | MIN. | TYP. | MAX. |
| A | 4.47 | | 4.67 | 0.176 | | 0.184 |
| b | 0.70 | | 0.91 | 0.028 | | 0.036 |
| b1 | 1.17 | | 1.37 | 0.046 | | 0.054 |
| c | 0.31 | | 0.53 | 0.012 | | 0.021 |
| D | 14.60 | | 15.70 | 0.575 | | 0.618 |
| E | 9.96 | | 10.36 | 0.392 | | 0.408 |
| e | | 2.54 | | | 0.100 | |
| e1 | | 5.08 | | | 0.200 | |
| F | 1.17 | | 1.37 | 0.046 | | 0.054 |
| H1 | 6.1 | | 6.8 | 0.240 | | 0.268 |
| J1 | 2.52 | | 2.82 | 0.099 | | 0.111 |
| L | 12.70 | | 13.80 | 0.500 | | 0.543 |
| L1 | 3.20 | | 3.96 | 0.126 | | 0.156 |
| L20 | 15.21 | | 16.77 | 0.599 | | 0.660 |
| $\phi$P | 3.73 | | 3.94 | 0.147 | | 0.155 |
| Q | 2.59 | | 2.89 | 0.102 | | 0.114 |

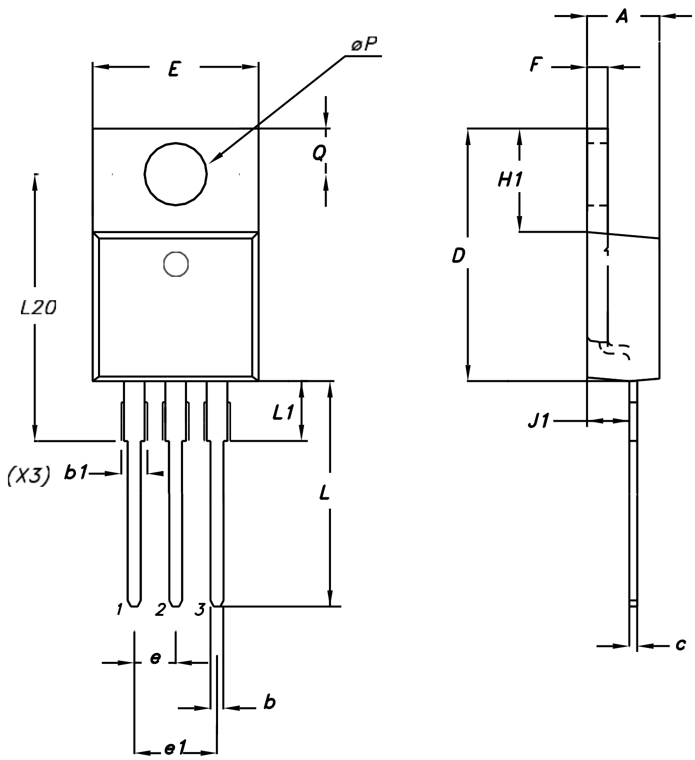

## TO-220FP MECHANICAL DATA

| DIM. | mm. | | | inch | | |
|---|---|---|---|---|---|---|
| | MIN. | TYP | MAX. | MIN. | TYP. | MAX. |
| A | 4.40 | | 4.60 | 0.173 | | 0.181 |
| B | 2.5 | | 2.7 | 0.098 | | 0.106 |
| D | 2.5 | | 2.75 | 0.098 | | 0.108 |
| E | 0.45 | | 0.70 | 0.017 | | 0.027 |
| F | 0.75 | | 1 | 0.030 | | 0.039 |
| F1 | 1.15 | | 1.50 | 0.045 | | 0.059 |
| F2 | 1.15 | | 1.50 | 0.045 | | 0.059 |
| G | 4.95 | | 5.2 | 0.194 | | 0.204 |
| G1 | 2.4 | | 2.7 | 0.094 | | 0.106 |
| H | 10.0 | | 10.40 | 0.393 | | 0.409 |
| L2 | | 16 | | | 0.630 | |
| L3 | 28.6 | | 30.6 | 1.126 | | 1.204 |
| L4 | 9.8 | | 10.6 | 0.385 | | 0.417 |
| L5 | 2.9 | | 3.6 | 0.114 | | 0.142 |
| L6 | 15.9 | | 16.4 | 0.626 | | 0.645 |
| L7 | 9 | | 9.3 | 0.354 | | 0.366 |
| DIA. | 3 | | 3.2 | 0.118 | | 0.126 |

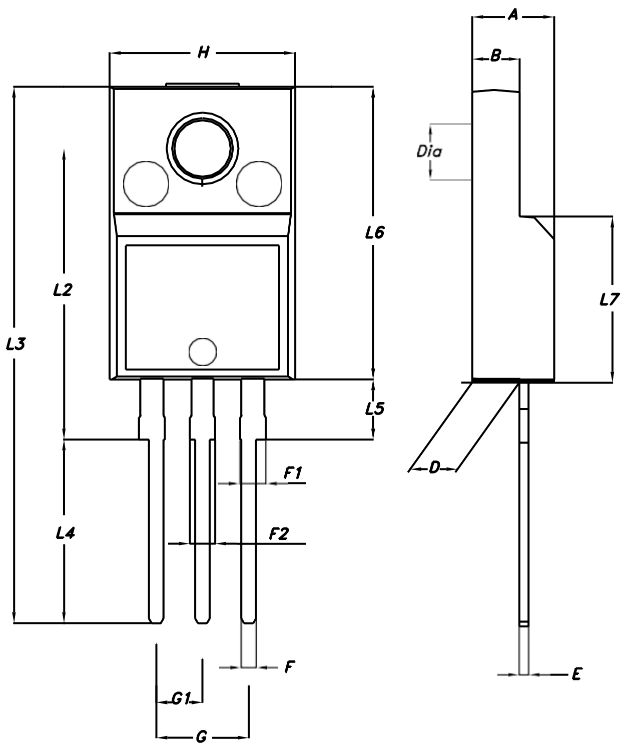

# TO-220FM MECHANICAL DATA

| DIM. | mm. | | | inch | | |
|---|---|---|---|---|---|---|
| | MIN. | TYP | MAX. | MIN. | TYP. | MAX. |
| A | 4.50 | | 4.90 | 0.177 | | 0.193 |
| B | 2.34 | | 2.74 | 0.092 | | 0.108 |
| D | 2.56 | | 2.96 | 0.101 | | 0.117 |
| E | 0.45 | 0.50 | 0.60 | 0.018 | 0.020 | 0.024 |
| F | 0.70 | | 0.90 | 0.028 | | 0.035 |
| F1 | | | 1.47 | | | 0.058 |
| G | | 5.08 | | | 0.200 | |
| G1 | 2.34 | 2.54 | 2.74 | 0.092 | 0.100 | 0.108 |
| H | 9.96 | | 10.36 | 0.392 | | 0.408 |
| L2 | | 15.8 | | | 0.622 | |
| L4 | 9.45 | | 10.05 | 0.372 | | 0.396 |
| L6 | 15.67 | | 16.07 | 0.617 | | 0.633 |
| L7 | 8.99 | | 9.39 | 0.354 | | 0.370 |
| L8 | | 3.30 | | | 0.130 | |
| DIA. | 3.08 | | 3.28 | 0.121 | | 0.129 |

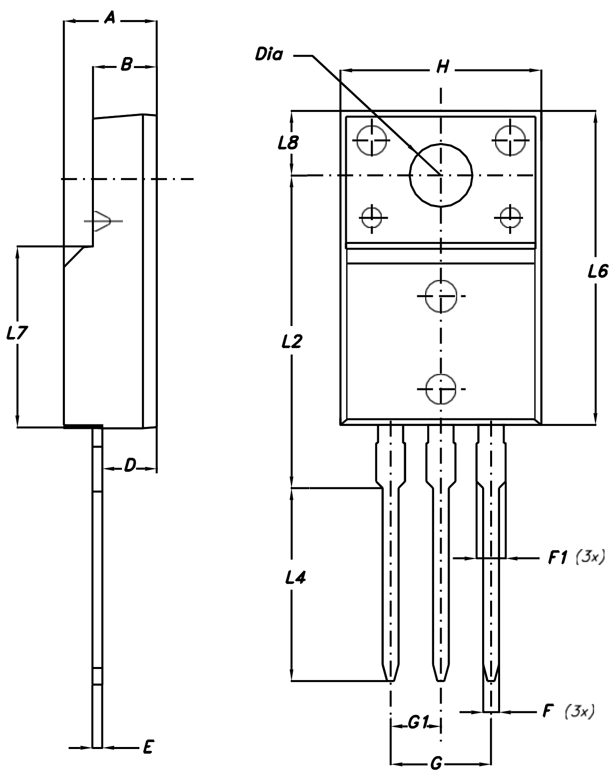

# $D^2$PAK (A TYPE) MECHANICAL DATA

| DIM. | mm. | | | inch | | |
|---|---|---|---|---|---|---|
| | MIN. | TYP | MAX. | MIN. | TYP. | MAX. |
| A | 4.4 | | 4.6 | 0.173 | | 0.181 |
| A1 | 0.03 | | 0.23 | 0.001 | | 0.009 |
| b | 0.7 | | 0.93 | 0.027 | | 0.036 |
| b2 | 1.14 | | 1.7 | 0.044 | | 0.067 |
| c | 0.45 | | 0.6 | 0.017 | | 0.023 |
| c2 | 1.23 | | 1.36 | 0.048 | | 0.053 |
| D | 8.95 | | 9.35 | 0.352 | | 0.368 |
| D1 | 8 | | | 0.315 | | |
| E | 10 | | 10.4 | 0.393 | | 0.409 |
| E1 | 8.5 | | | 0.335 | | |
| e | | 2.54 | | | 0.100 | |
| e1 | 4.88 | | 5.28 | 0.192 | | 0.208 |
| H | 15 | | 15.85 | 0.590 | | 0.624 |
| J1 | 2.49 | | 2.69 | 0.098 | | 0.106 |
| L | 2.29 | | 2.79 | 0.090 | | 0.110 |
| L1 | 1.27 | | 1.4 | 0.050 | | 0.055 |
| L2 | 1.3 | | 1.75 | 0.051 | | 0.069 |
| R | | 0.4 | | | 0.016 | |
| V2 | 0° | | 8° | 0° | | 8° |

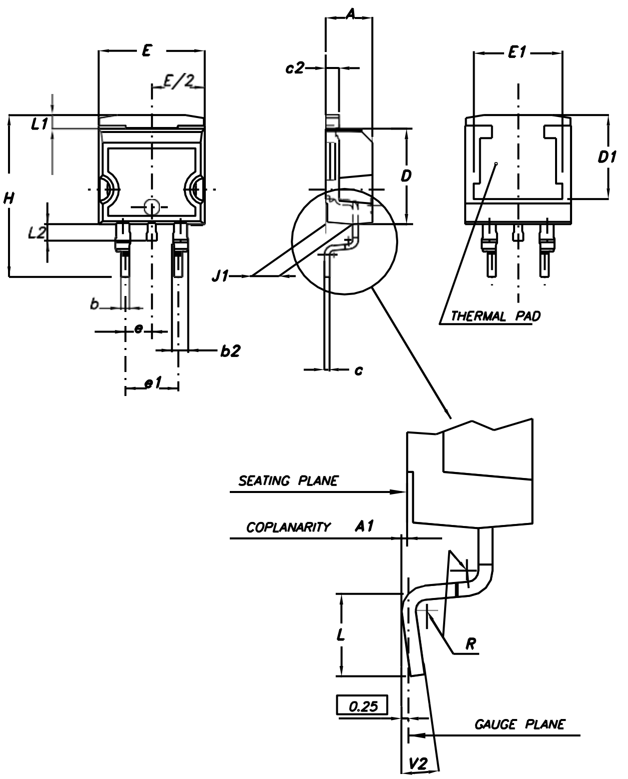

# $D^2$PAK (C TYPE) MECHANICAL DATA

| DIM. | mm. | | | inch | | |
|---|---|---|---|---|---|---|
| | MIN. | TYP | MAX. | MIN. | TYP. | MAX. |
| A | 4.3 | | 4.7 | 0.169 | | 0.185 |
| A1 | 0 | | 0.20 | 0.000 | | 0.008 |
| b | 0.70 | | 0.90 | 0.028 | | 0.035 |
| b2 | 1.17 | | 1.37 | 0.046 | | 0.054 |
| c | 0.45 | 0.50 | 0.6 | 0.018 | 0.020 | 0.024 |
| c2 | 1.25 | 1.30 | 1.40 | 0.049 | 0.051 | 0.055 |
| D | 9.0 | 9.2 | 9.4 | 0.354 | 0.362 | 0.370 |
| D1 | 7.5 | | | 0.295 | | |
| E | 9.8 | | 10.2 | 0.386 | | 0.402 |
| E1 | 7.5 | | | 0.295 | | |
| e | | 2.54 | | | 0.100 | |
| e1 | | 5.08 | | | 0.200 | |
| H | 15 | 15.30 | 15.60 | 0.591 | 0.602 | 0.614 |
| J1 | 2.20 | | 2.60 | 0.087 | | 0.102 |
| L | 1.79 | | 2.79 | 0.070 | | 0.110 |
| L1 | 1.0 | | 1.4 | 0.039 | | 0.055 |
| L2 | 1.2 | | 1.6 | 0.047 | | 0.063 |
| R | | 0.3 | | | 0.012 | |
| V2 | 0° | | 3° | 0° | | 3° |

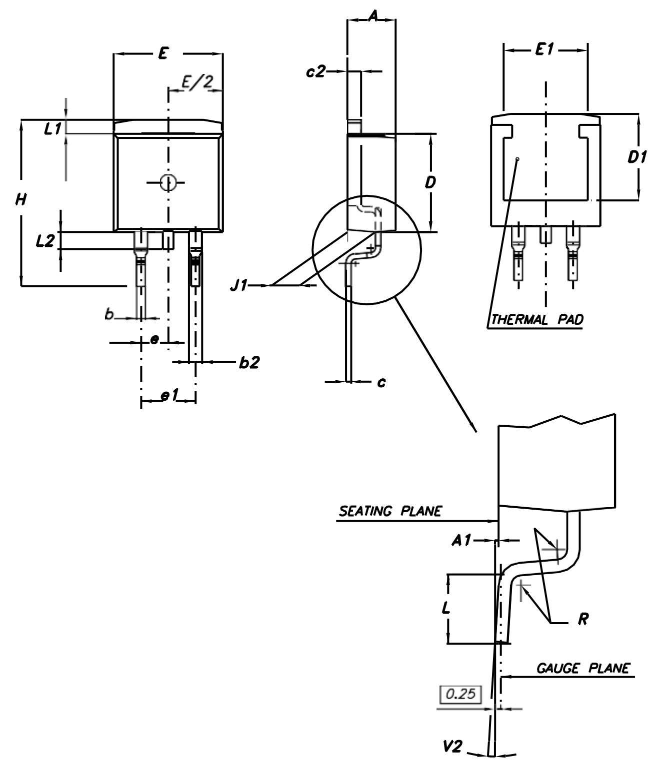

## Tape & Reel $D^2PAK$-$P^2PAK$-$D^2PAK/A$-$P^2PAK/A$ MECHANICAL DATA

| DIM. | mm. | | | inch | | |
|---|---|---|---|---|---|---|
| | MIN. | TYP | MAX. | MIN. | TYP. | MAX. |
| A | | | 180 | | | 7.086 |
| C | 12.8 | 13.0 | 13.2 | 0.504 | 0.512 | 0.519 |
| D | 20.2 | | | 0.795 | | |
| N | 60 | | | 2.362 | | |
| T | | | 14.4 | | | 0.567 |
| Ao | 10.50 | 10.6 | 10.70 | 0.413 | 0.417 | 0.421 |
| Bo | 15.70 | 15.80 | 15.90 | 0.618 | 0.622 | 0.626 |
| Ko | 4.80 | 4.90 | 5.00 | 0.189 | 0.193 | 0.197 |
| Po | 3.9 | 4.0 | 4.1 | 0.153 | 0.157 | 0.161 |
| P | 11.9 | 12.0 | 12.1 | 0.468 | 0.472 | 0.476 |

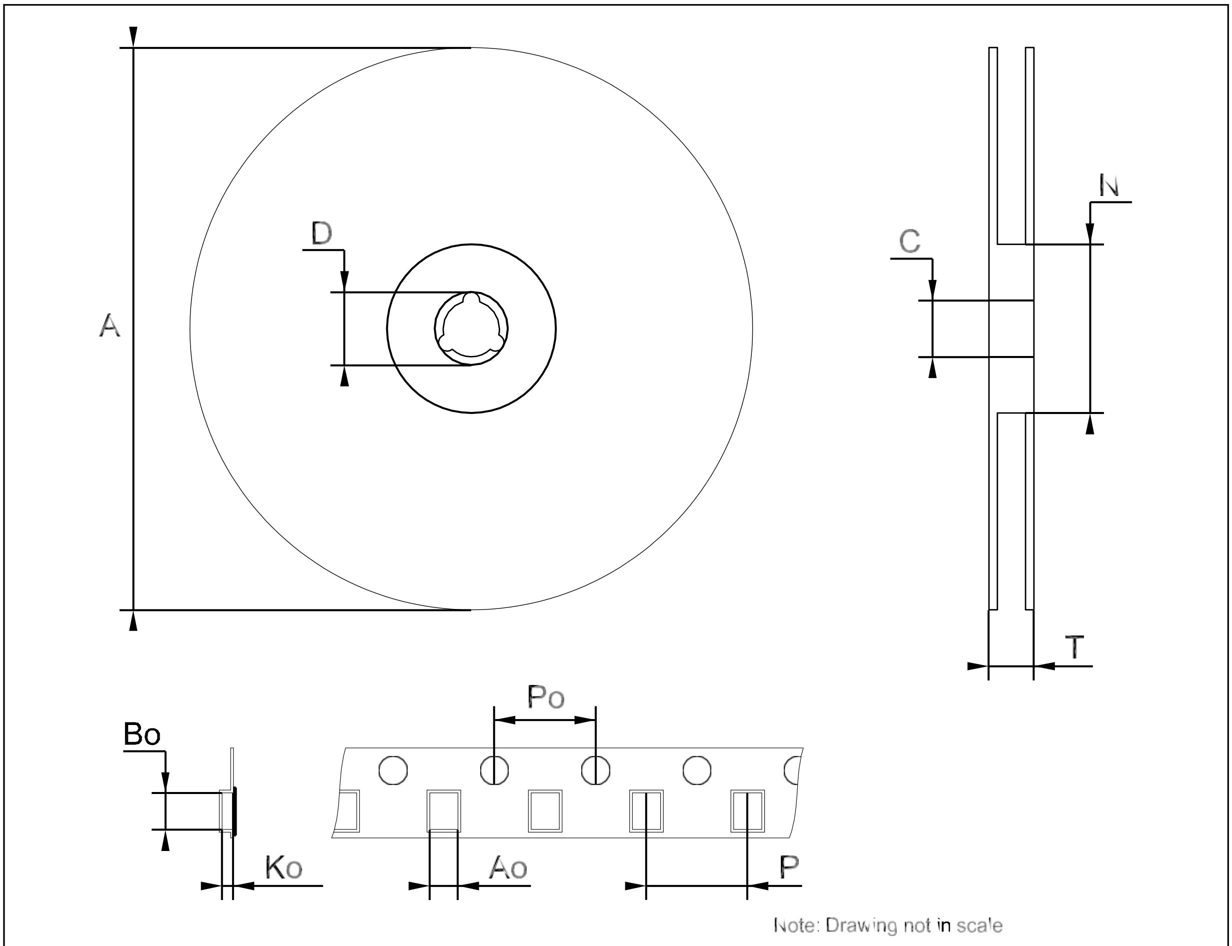

## ABSOLUTE MAXIMUM RATINGS (Note 1)

Terminal Voltages
- $V_{CC}$ (Note 3) ............................................V to 6V
- OV, UV, OV..........................................................V to 16V
- TMR....................................0.3V to ($V_{CC}$ + 0.3V)
- VH, VL, ĭATCŇ, DIS ..............................V to 7.5V

Terminal Currents
- $I_{VCC}$ ..................................................................10mA
- $I_{UV}$, $I_{OV}$, $I_{OV}$...............................................................10mA

Operating Temperature Range
- LTC2912C .......................................0°C to 70°C
- LTC2912I....................................... 40°C to 85°C
- LTC2912H ....................................40°C to 125°C

Storage Temperature Range......................65°C to 150°C

Lead Temperature (Soldering, 10 sec)
TSOT .....................................................300°C

## PACKAGE/ORDER INFORMATION

LTC2912-1

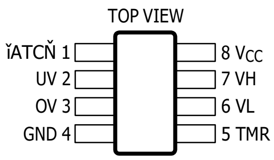


TS8 PACKAGE
8-LEAD PLASTIC TSOT-23
$T_{JMAX}$ = 125°C, $\theta_{JA}$ = 195°C/W

LTC2912-1

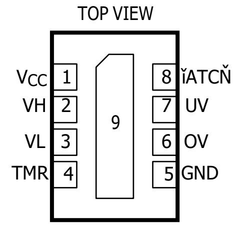


DDB PACKAGE
8-LEAD (3mm × 2mm) PLASTIC DFN
$T_{JMAX}$ = 125°C, $\theta_{JA}$ = 55°C/W
EXPOSED PAD (PIN 9) IS GND, MUST BE SOLDERED TO PCB

LTC2912-2

TOP VIEW

DIS 1 — 8 $V_{CC}$
UV 2 — 7 VH
OV 3 — 6 VL
GND 4 — 5 TMR

TS8 PACKAGE
8-LEAD PLASTIC TSOT-23
$T_{JMAX}$ = 125°C, $\theta_{JA}$ = 195°C/W

LTC2912-2

TOP VIEW

$V_{CC}$ 1 — 8 DIS
VH 2 — 7 UV
9
VL 3 — 6 OV
TMR 4 — 5 GND

DDB PACKAGE
8-LEAD (3mm × 2mm) PLASTIC DFN
$T_{JMAX}$ = 125°C, $\theta_{JA}$ = 55°C/W
EXPOSED PAD (PIN 9) IS GND, MUST BE SOLDERED TO PCB

LTC2912-3

TOP VIEW

ĭATCŇ 1 — 8 $V_{CC}$
UV 2 — 7 VH
OV 3 — 6 VL
GND 4 — 5 TMR

TS8 PACKAGE
8-LEAD PLASTIC TSOT-23
$T_{JMAX}$ = 125°C, $\theta_{JA}$ = 195°C/W

LTC2912-3

TOP VIEW

$V_{CC}$ 1 — 8 ĭATCŇ
VH 2 — 7 UV
9
VL 3 — 6 OV
TMR 4 — 5 GND

DDB PACKAGE
8-LEAD (3mm × 2mm) PLASTIC DFN
$T_{JMAX}$ = 125°C, $\theta_{JA}$ = 55°C/W
EXPOSED PAD (PIN 9) IS GND, MUST BE SOLDERED TO PCB

# ORDER INFORMATION

**Lead Free Finish**

| TAPE AND REEL (MINI) | TAPE AND REEL | PART MARKING* | PACKAGE DESCRIPTION | TEMPERATURE RANGE |
|---|---|---|---|---|
| LTC2912CTS8-1#TRMPBF | LTC2912CTS8-1#TRPBF | LTCJW | 8-Lead Plastic TSOT-23 | 0°C to 70°C |
| LTC2912ITS8-1#TRMPBF | LTC2912ITS8-1#TRPBF | LTCJW | 8-Lead Plastic TSOT-23 | –40°C to 85°C |
| LTC2912HTS8-1#TRMPBF | LTC2912HTS8-1#TRPBF | LTCJW | 8-Lead Plastic TSOT-23 | –40°C to 125°C |
| LTC2912CDDB-1#TRMPBF | LTC2912CDDB-1#TRPBF | LCJZ | 8-Lead (3mm × 2mm) Plastic DFN | 0°C to 70°C |
| LTC2912IDDB-1#TRMPBF | LTC2912IDDB-1#TRPBF | LCJZ | 8-Lead (3mm × 2mm) Plastic DFN | –40°C to 85°C |
| LTC2912HDDB-1#TRMPBF | LTC2912HDDB-1#TRPBF | LCJZ | 8-Lead (3mm × 2mm) Plastic DFN | –40°C to 125°C |
| LTC2912CTS8-2#TRMPBF | LTC2912CTS8-2#TRPBF | LTCJX | 8-Lead Plastic TSOT-23 | 0°C to 70°C |
| LTC2912ITS8-2#TRMPBF | LTC2912ITS8-2#TRPBF | LTCJX | 8-Lead Plastic TSOT-23 | –40°C to 85°C |
| LTC2912HTS8-2#TRMPBF | LTC2912HTS8-2#TRPBF | LTCJX | 8-Lead Plastic TSOT-23 | –40°C to 125°C |
| LTC2912CDDB-2#TRMPBF | LTC2912CDDB-2#TRPBF | LCKB | 8-Lead (3mm × 2mm) Plastic DFN | 0°C to 70°C |
| LTC2912IDDB-2#TRMPBF | LTC2912IDDB-2#TRPBF | LCKB | 8-Lead (3mm × 2mm) Plastic DFN | –40°C to 85°C |
| LTC2912HDDB-2#TRMPBF | LTC2912HDDB-2#TRPBF | LCKB | 8-Lead (3mm × 2mm) Plastic DFN | –40°C to 125°C |
| LTC2912CTS8-3#TRMPBF | LTC2912CTS8-3#TRPBF | LTCJY | 8-Lead Plastic TSOT-23 | 0°C to 70°C |
| LTC2912ITS8-3#TRMPBF | LTC2912ITS8-3#TRPBF | LTCJY | 8-Lead Plastic TSOT-23 | –40°C to 85°C |
| LTC2912HTS8-3#TRMPBF | LTC2912HTS8-3#TRPBF | LTCJY | 8-Lead Plastic TSOT-23 | –40°C to 125°C |
| LTC2912CDDB-3#TRMPBF | LTC2912CDDB-3#TRPBF | LCKC | 8-Lead (3mm × 2mm) Plastic DFN | 0°C to 70°C |
| LTC2912IDDB-3#TRMPBF | LTC2912IDDB-3#TRPBF | LCKC | 8-Lead (3mm × 2mm) Plastic DFN | –40°C to 85°C |
| LTC2912HDDB-3#TRMPBF | LTC2912HDDB-3#TRPBF | LCKC | 8-Lead (3mm × 2mm) Plastic DFN | –40°C to 125°C |

Contact the factory for parts specified with wider operating temperature ranges. *The temperature grade is identified by a label on the shipping container. Tape and reel specifications. Some packages are available in 500 unit reels through designated sales channels with #TRMPBF suffix.

## ELECTRICAL CHARACTERISTICS

**The ● denotes the specifications which apply over the full operating temperature range, otherwise specifications are at $T_A$ = 25°C. $V_{CC}$ = 3.3V, VL = 0.45V, VH = 0.55V, $\overline{LATCH}$ = $V_{CC}$ unless otherwise noted. (Note 2)**

| SYMBOL | PARAMETER | CONDITIONS | | MIN | TYP | MAX | UNITS |
|---|---|---|---|---|---|---|---|
| $V_{SHUNT}$ | $V_{CC}$ Shunt Regulator Voltage | $I_{CC}$ = 5mA<br>$I_{CC}$ = 5mA (H-Grade) | ●<br>● | 6.2<br>6.2 | 6.6<br>6.6 | 7.2<br>7.3 | V<br>V |
| $\Delta V_{SHUNT}$ | $V_{CC}$ Shunt Regulator Load Regulation | $I_{CC}$ = 2mA to 10mA | ● | | 200 | 300 | mV |
| $V_{CC}$ | Supply Voltage (Note 3) | | ● | 2.3 | | $V_{SHUNT}$ | V |
| $V_{CCR(MIN)}$ | Minimum $V_{CC}$ Output Valid | DIS = 0V | ● | | | 1 | V |
| $V_{CC(UVLO)}$ | Supply Undervoltage Lockout | DIS = 0V, $V_{CC}$ Rising | ● | 1.9 | 2 | 2.1 | V |
| $\Delta V_{CC(UVHYST)}$ | Supply Undervoltage Lockout Hysteresis | DIS = 0V | ● | 5 | 25 | 50 | mV |
| $I_{CC}$ | Supply Current | $V_{CC}$ = 2.3V to 6V | ● | | 29 | 70 | µA |
| $V_{UOT}$ | Undervoltage/Overvoltage Threshold | | ● | 492 | 500 | 508 | mV |
| $t_{UOD}$ | Undervoltage/Overvoltage Threshold to Output Delay | $V_{Hn}$ = $V_{UOT}$ – 5mV or $V_{Ln}$ = $V_{UOT}$ + 5mV | ● | 50 | 125 | 500 | µs |
| $I_{VHL}$ | VH, VL Input Current | <br>H-Grade | ●<br>● | | | ±15<br>±30 | nA<br>nA |
| $t_{UOTO}$ | UV/OV Time-Out Period | $C_{TMR}$ = 1nF<br>$C_{TMR}$ = 1nF (H-Grade) | ●<br>● | 6<br>6 | 8.5<br>8.5 | 12.5<br>14 | ms<br>ms |
| $V_{\overline{LATCH}(VIH)}$ | OV Latch Clear Input High | | ● | 1.2 | | | V |
| $V_{\overline{LATCH}(VIL)}$ | OV Latch Clear Input Low | | ● | | | 0.8 | V |
| $I_{\overline{LATCH}}$ | $\overline{LATCH}$ Input Current | $V_{\overline{LATCH}}$ > 0.5V | ● | | | ±1 | µA |
| $I_{DIS}$ | DIS Input Current | $V_{DIS}$ > 0.5V | ● | 1 | 2 | 3.3 | µA |
| $V_{DIS(VIH)}$ | DIS Input High | | ● | 1.2 | | | V |
| $V_{DIS(VIL)}$ | DIS Input Low | | ● | | | 0.8 | V |
| $I_{TMR(UP)}$ | TMR Pull-Up Current | $V_{TMR}$ = 0V<br>$V_{TMR}$ = 0V (H-Grade) | ●<br>● | –1.3<br>–1.2 | –2.1<br>–2.1 | –2.8<br>–2.8 | µA<br>µA |
| $I_{TMR(DOWN)}$ | TMR Pull-Down Current | $V_{TMR}$ = 1.6V<br>$V_{TMR}$ = 1.6V (H-Grade) | ●<br>● | 1.3<br>1.2 | 2.1<br>2.1 | 2.8<br>2.8 | µA<br>µA |
| $V_{TMR(DIS)}$ | Timer Disable Voltage | Referenced to $V_{CC}$ | ● | –180 | –270 | | mV |
| $V_{OH}$ | Output Voltage High UV/OV/OV | $V_{CC}$ = 2.3V, $I_{UV/OV}$ = –1µA | ● | 1 | | | V |
| $V_{OL}$ | Output Voltage Low UV/OV/OV | $V_{CC}$ = 2.3V, $I_{UV/OV}$ = 2.5mA<br>$V_{CC}$ = 1V, $I_{UV}$ = 100µA | ●<br>● | | 0.10<br>0.01 | 0.30<br>0.15 | V<br>V |

**Note 1:** Stresses beyond those listed under Absolute Maximum Ratings may cause permanent damage to the device. Exposure to any Absolute Maximum Rating condition for extended periods may affect device reliability and lifetime.

**Note 2:** All currents into pins are positive; all voltages are referenced to GND unless otherwise noted.

**Note 3:** $V_{CC}$ maximum pin voltage is limited by input current. Since the $V_{CC}$ pin has an internal 6.5V shunt regulator, a low impedance supply that exceeds 6V may exceed the rated terminal current. Operation from higher voltage supplies requires a series dropping resistor. See Applications Information.

Rev. C

# Appendix B

## iThenticate Plagiarism Report

Capstone Project Book 2022.2.5 F

ORIGINALITY REPORT

12%

SIMILARITY INDEX

PRIMARY SOURCES

| | | |
|---|---|---|
| 1 | megasan.com<br>Internet | 674 words — 5% |
| 2 | e-voron.dp.ua<br>Internet | 519 words — 4% |
| 3 | docs.rs-online.com<br>Internet | 354 words — 2% |
| 4 | tesis.pucp.edu.pe<br>Internet | 171 words — 1% |

| | | | |
|---|---|---|---|
| EXCLUDE QUOTES | ON | EXCLUDE SOURCES | < 150 WORDS |
| EXCLUDE BIBLIOGRAPHY | ON | EXCLUDE MATCHES | < 150 WORDS |